Bio-Systems Modeling and Control

Lecture 25
Glucose and Insulin Dynamics: The Minimal Model

Reference:

- Michael C. Khoo, “Physiological Control Systems – Analysis, Simulation and Estimation”, IEEE/Wiley 1999 (Sections 3.6 and 5.5).
- Robert Northrop, “Endogenous and Exogenous Regulation and Control of Physiological Systems”, Chapman & Hall, 2000 (Chapter 7)

The “Minimal Model”

- The model involves only two compartments:
- Blood Glucose compartment
- Blood Insulin compartment
- More complicated models introduce more compartments: Glucose & Insulin: in the Liver, GI system, Kidneys, “peripherals” & typically one compartment for Blood Glucagon

Why is Glucose Important?

- Glucose is the principal source of energy for cell metabolism.
- There are other biochemical pathways whereby other sugars, starches, fats and proteins in the diet can be converted to glucose.

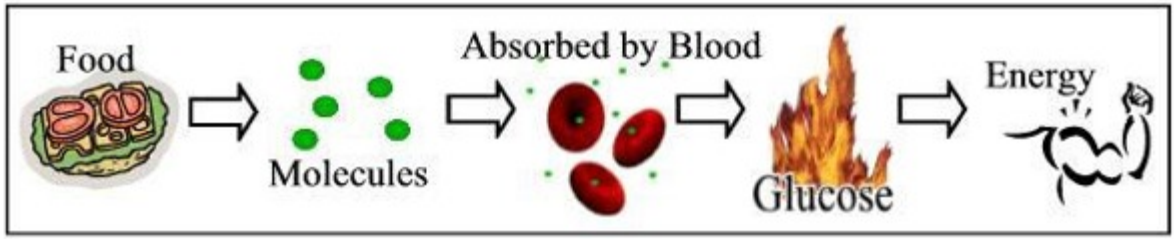

Glucose Sinks, once it is in the circulatory system:

- It is stored in the liver (and to a lesser degree in muscle cells) as glycogen (a high molecular weight polymer)
- It can be lost in the urine if blood glucose concentration rises above a threshold of about 1.8 g/l
- It diffuses into insulin-sensitive cells (such as muscle cells). Insulin assist in the diffusion by binding with a receptor and by that activating a glucose transport protein residing on the cell membrane. This increases glucose permeability up to 10-20 times.
- It diffuses into non-insulin-sensitive cells such as nerves.

Glucose Sources

- Dietary intake
- Gluconeogenesis – biochemical entities such as glycerol, lactate and many more are converted in complex multistep enzymatic processes to glucose
- Breakdown of liver glycogen to glucose
  - The last two groups of processes are stimulated by the pancreatic hormone glucagon

The Glucoregulatory System

- Regulated by two hormones – Insulin and Glucagon
- It has one external input (diet) and 2 internal inputs (from the liver and through gluconeogenesis)
- It has four sinks (liver, urine system, insulin-sensitive cells, non-insulin-sensitive cells)

Hormones vs. Enzymes

- All enzymes are proteins. Hormones could be proteins or other chemicals.
- Enzymes are produced in all the cells to facilitate chemical reactions happening in the cells.
- Hormones are produced in special glands (called the endocrine glands) and travel through the blood to effect physiological control actions at specific locations.

Regulation Qualitative Description

- When plasma glucose level is elevated, insulin hormone secretion in the pancreas is stimulated.
- As blood insulin level rises, the uptake of blood glucose by some tissues increases.
- The increased outflow of glucose from the blood and interstitial fluid leads to a decrease of blood glucose concentration, which produces reduction in insulin secretion and increase in the secretion of another hormone called glucagon.
- Insulin and glucagon work in opposite ways.

Initial Assumptions

- The total volume of blood and interstitial fluids is represented by a single large compartment (Volume is around 15L in a normal adult).
- We denote the blood glucose concentration as x.
- [x]=mg/ml.
- Many people are more used to [x] = mg/dl (creating figures that are 100 times larger than the ones used in this lecture).
- Steady state: x=const. The total inflow of glucose into the compartment must equal the total outflow from the compartment.

The Regulation process:

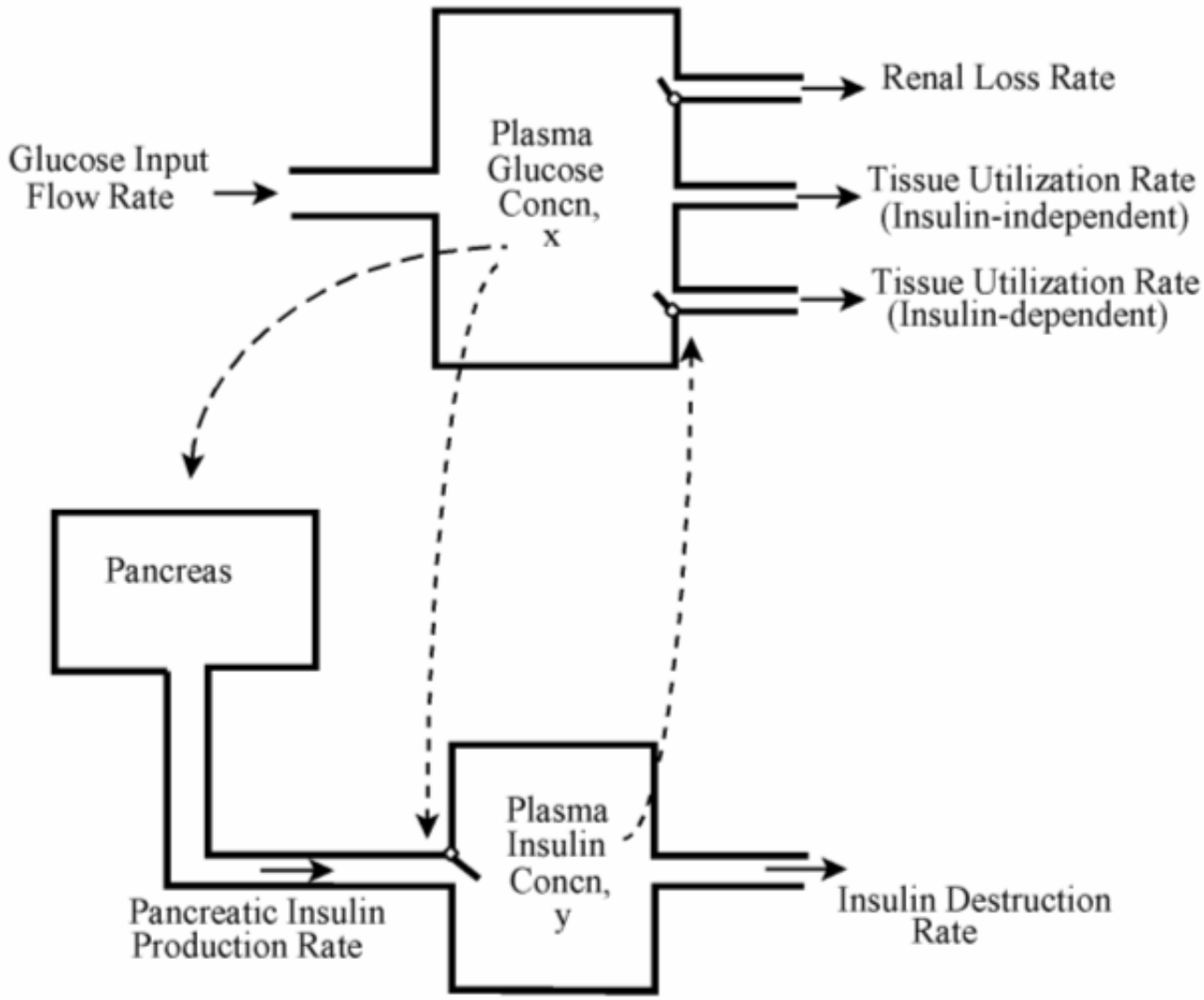

Glucose Intake

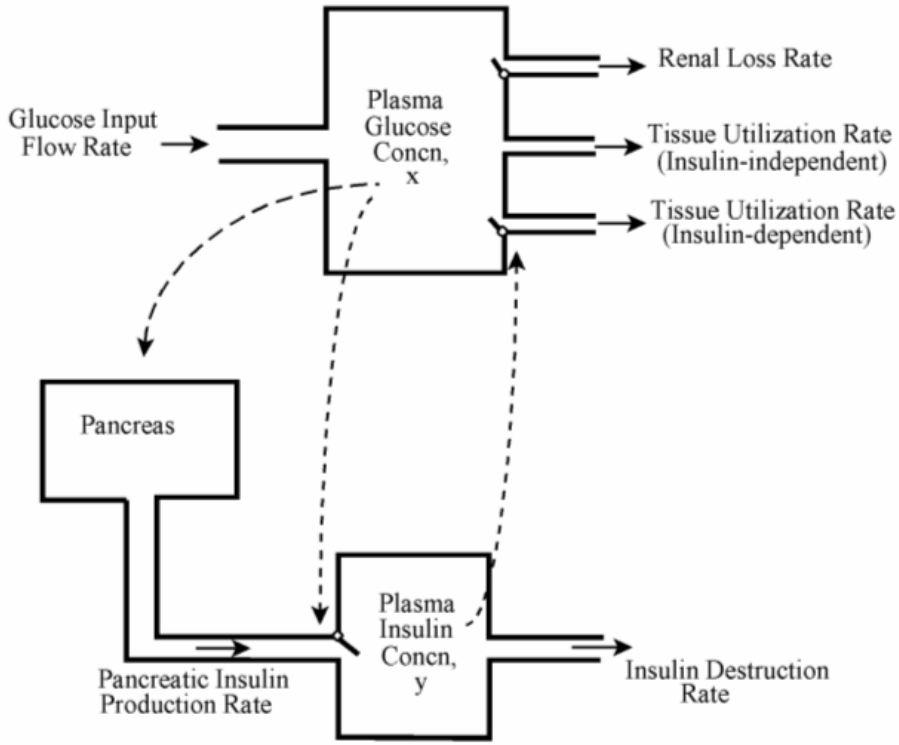

- Glucose enters the blood through absorption from the gastrointestinal tract, or through production by the liver.
- Denote input flow rate as Q_L [mg/h].

Glucose elimination from the blood through the kidneys

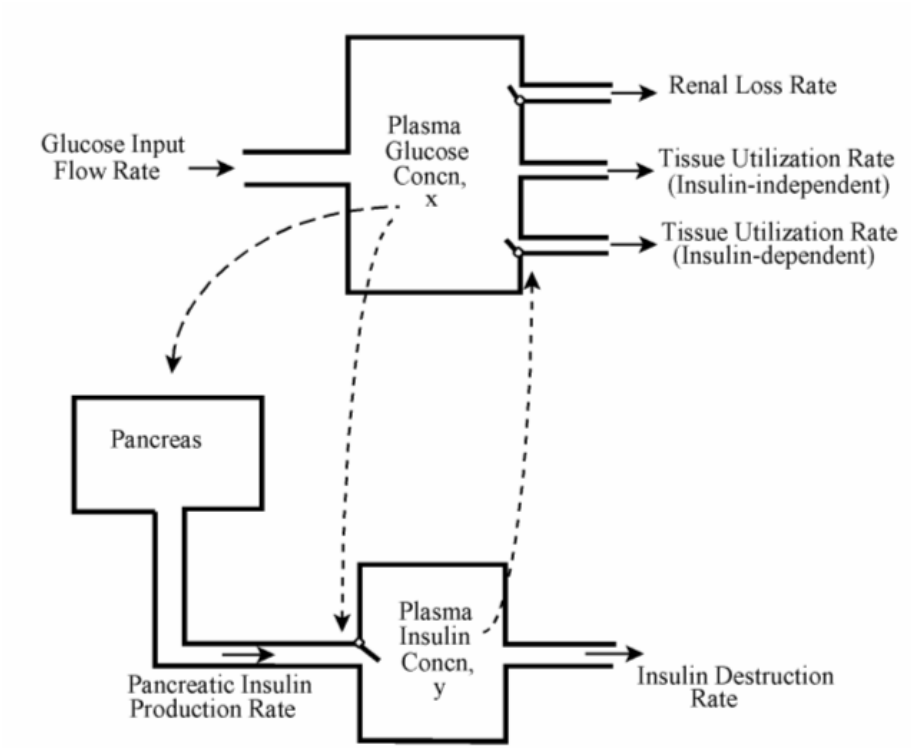

- When x is larger than a certain threshold θ, glucose is excreted by the kidneys at a rate proportional to the gradient between x and θ.
- Renal Loss Rate = $\mu(x-\theta)$ if $x > \theta$, or 0 if $x \leq \theta$.

Glucose Elimination from the Blood going to cells through facilitated diffusion

- Glucose leaves the blood to enter most cells through facilitated diffusion.
- In some tissues the rate of glucose utilization depends only on the extracellular-to-intracellular concentration gradient.

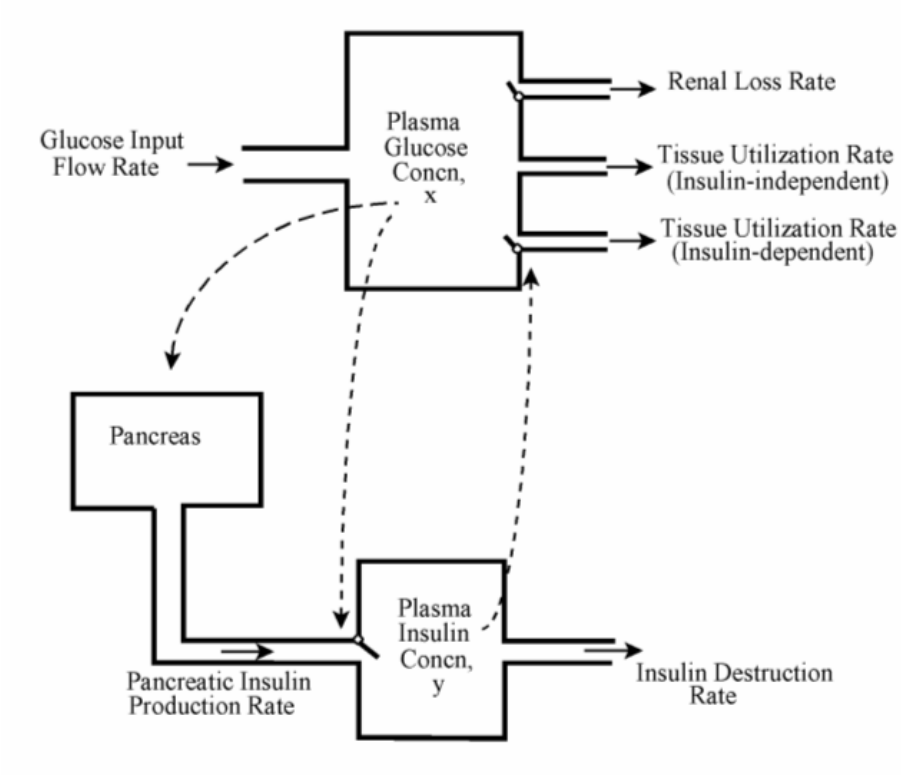

Glucose Elimination from the Blood going to cells through facilitated diffusion

- In most circumstances we can ignore the ICF glucose concentration.
- Tissue Utilization Rate (insulin-independent) ≈ λx

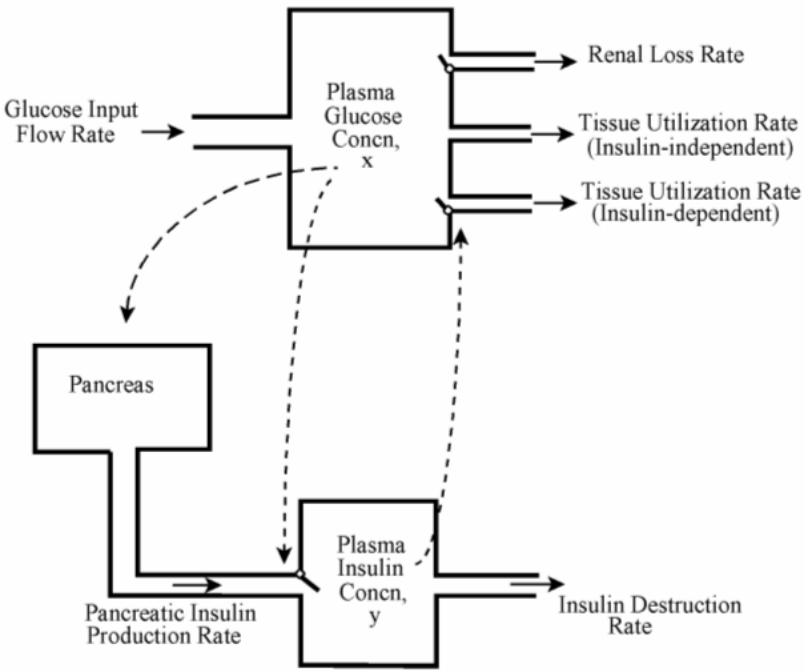

Glucose Elimination from the Blood going to cells through insulin facilitated diffusion

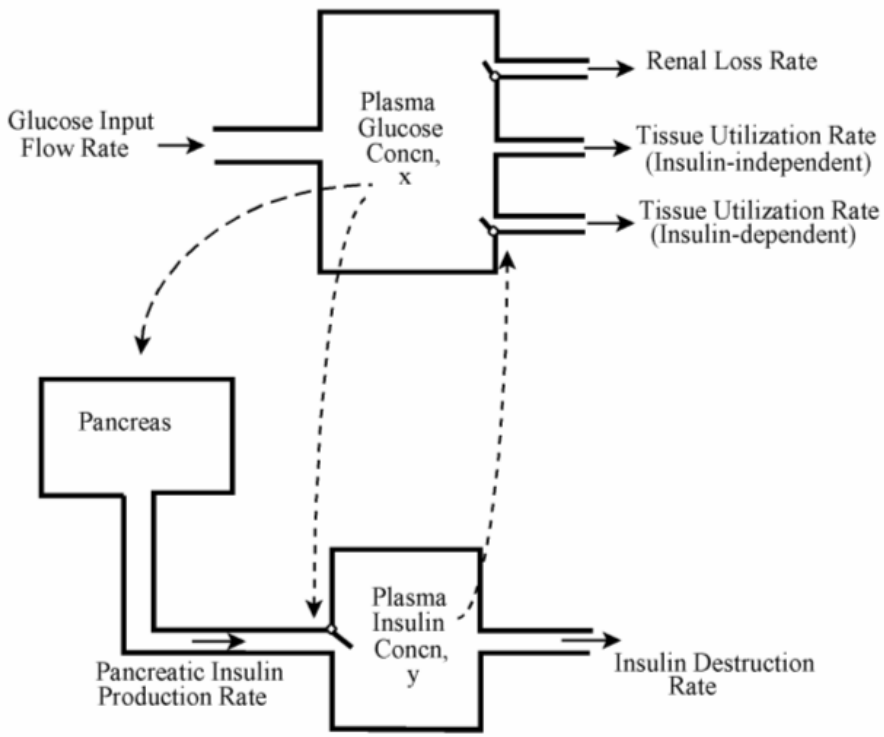

- In certain type of cells, such as muscle and adipose tissue, insulin helps to stimulate the facilitated diffusion process.
- Rate of glucose uptake is proportional to x and the blood insulin concentration y.

Glucose Elimination from the Blood going to cells through insulin facilitated diffusion

- Rate of glucose uptake is proportional to x and the blood insulin concentration y.
- Tissue Utilization rate (insulin-dependent) ≈ vxy

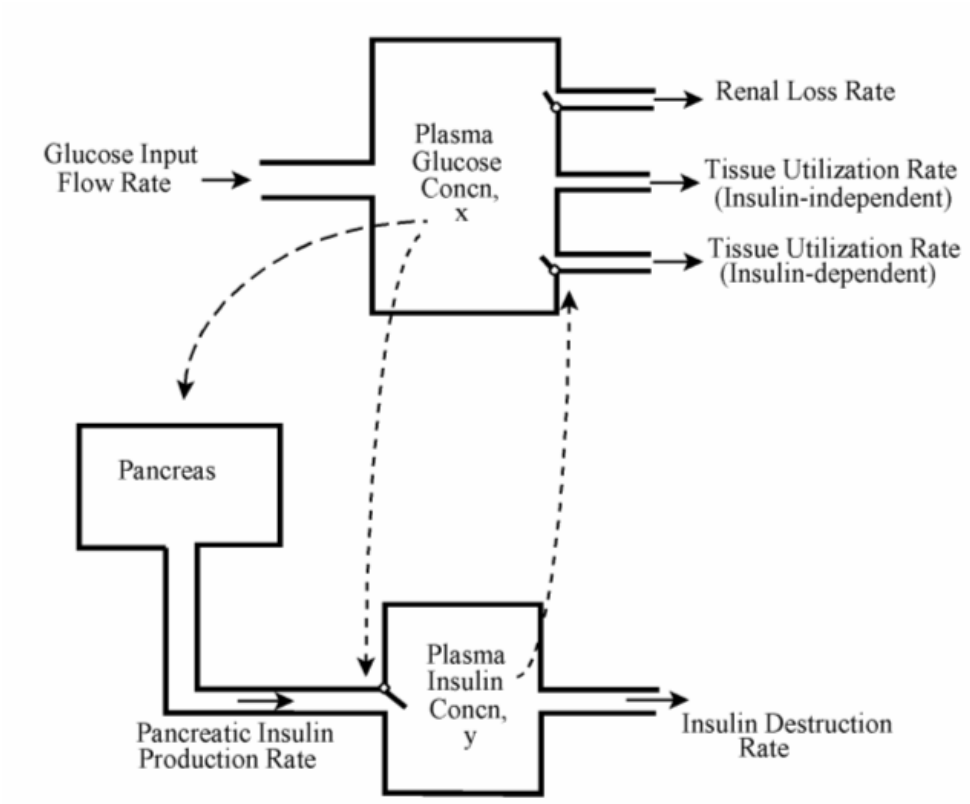

Blood Glucose Mass Balance

$$Q_L = \begin{cases} \lambda x + \upsilon xy & x \le \theta \\ \lambda x + \upsilon xy + \mu(x - \theta) & x > \theta \end{cases}$$

- Above is obtained by equating the inflow to the sum of the three outflows.
- There is a “built-in” negative feedback: If Q_L is constant, then an increase of x causes a decrease of y, and vice versa.

Steady-State Relationship between x and y (from Glucose compartment)

$$y = \frac{Q_L - \lambda x}{\nu x} \qquad x \le \theta$$

$$y = \frac{Q_L - \lambda x - \mu(x - \theta)}{\nu x} \qquad x \ge \theta$$

- Insulin steady-state concentration y is related to glucose steady-state concentration x via two continuous hyperbolic curves.

Summary of Nonlinear Effects seen so far

- Threshold effect in the kidneys
- Product effect in glucose absorption in insulin-dependent cells
- Non-negativity of x and y
- Soon one more threshold effect will be introduced related to the production of insulin.

Insulin Production

$$Insulin_Production_Rate = \begin{cases} 0 & x \le \phi \\ \beta(x-\phi) & x > \phi \end{cases}$$

- If blood glucose level x falls below a certain threshold φ, insulin production (at the pancreas) ceases.
- Insulin is produced at a rate that depends on plasma glucose level.

Insulin Destruction

$$Insulin_Destruction_Rate = \alpha y$$

- Insulin is destroyed through a reaction involving the insulinase enzyme.
- It is destroyed at a rate proportional to its own concentration in the blood.

Insulin and Glucose Steady-State Levels (for the Insulin compartment)

$$y = \begin{cases} 0 & x \le \phi \\ \dfrac{\beta}{\alpha}(x - \phi) & x > \phi \end{cases}$$

- Equating insulin production and destruction rates creates the above steady-state solution.
- Steady-state levels of x (glucose) and insulin (y) are therefore related piece-wise linearly.

Glucose-Insulin Steady-State

- We can use the steady-state condition for glucose to plot y vs. x. (It is one hyperbolic graph for $x<\theta$ connected to another graph for $x>\theta$)
- We can use the steady-state condition for insulin to plot y vs. x, as well ($y=0$ connected to a linear graph of slope β/α).
- Drawing the two plots together provides a graphic solution to the overall system steady-state solution, as function of the input and the system coefficients.

Three Steady-State Cases

- Normal
- Type-1 Diabetes
- Type-2 Diabetes

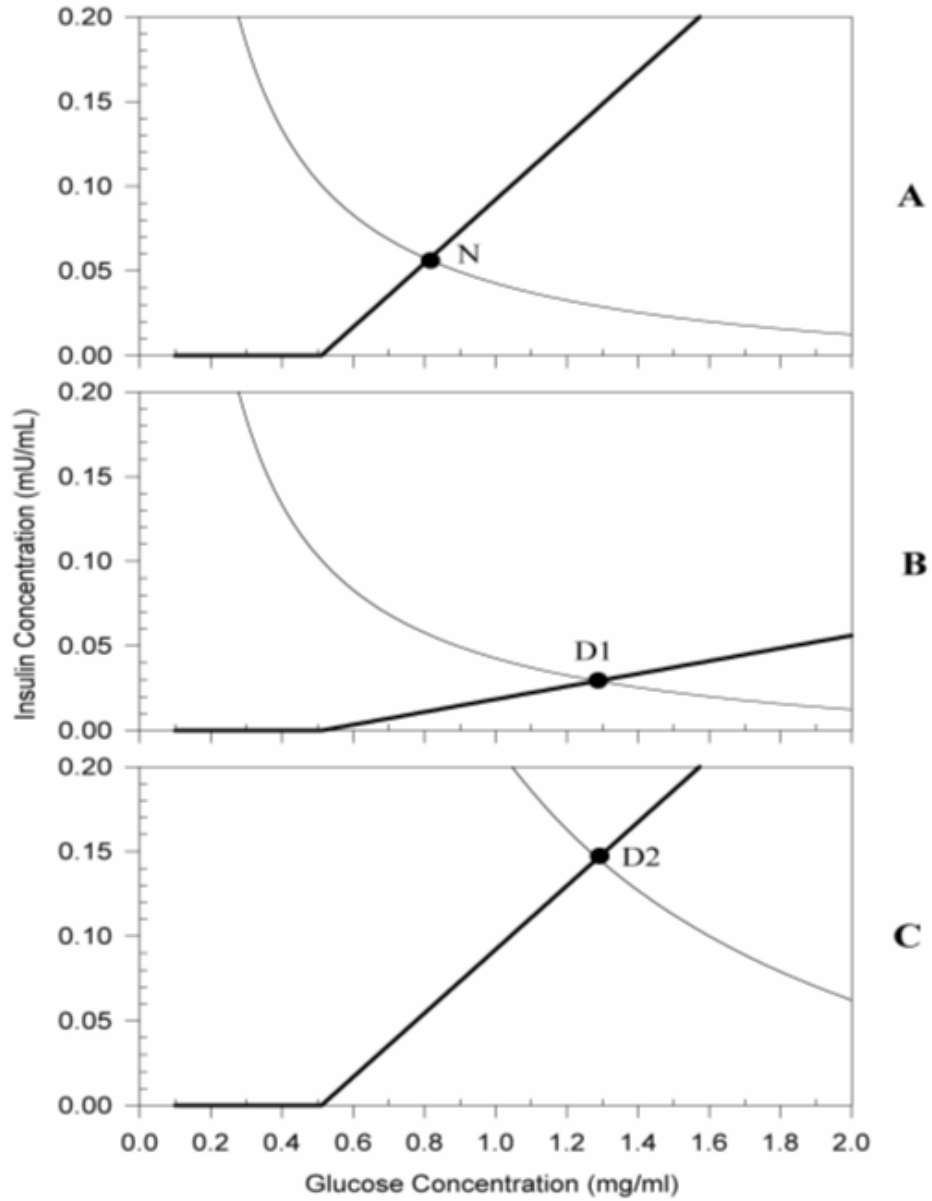

Case A: Normal Healthy Adult

- Insulin blood concentration (in milliUnits per ml blood) is plotted against blood glucose concentration (in mg per ml).
- Axis x is glucose (a normal level of 80-90 mg/dl)

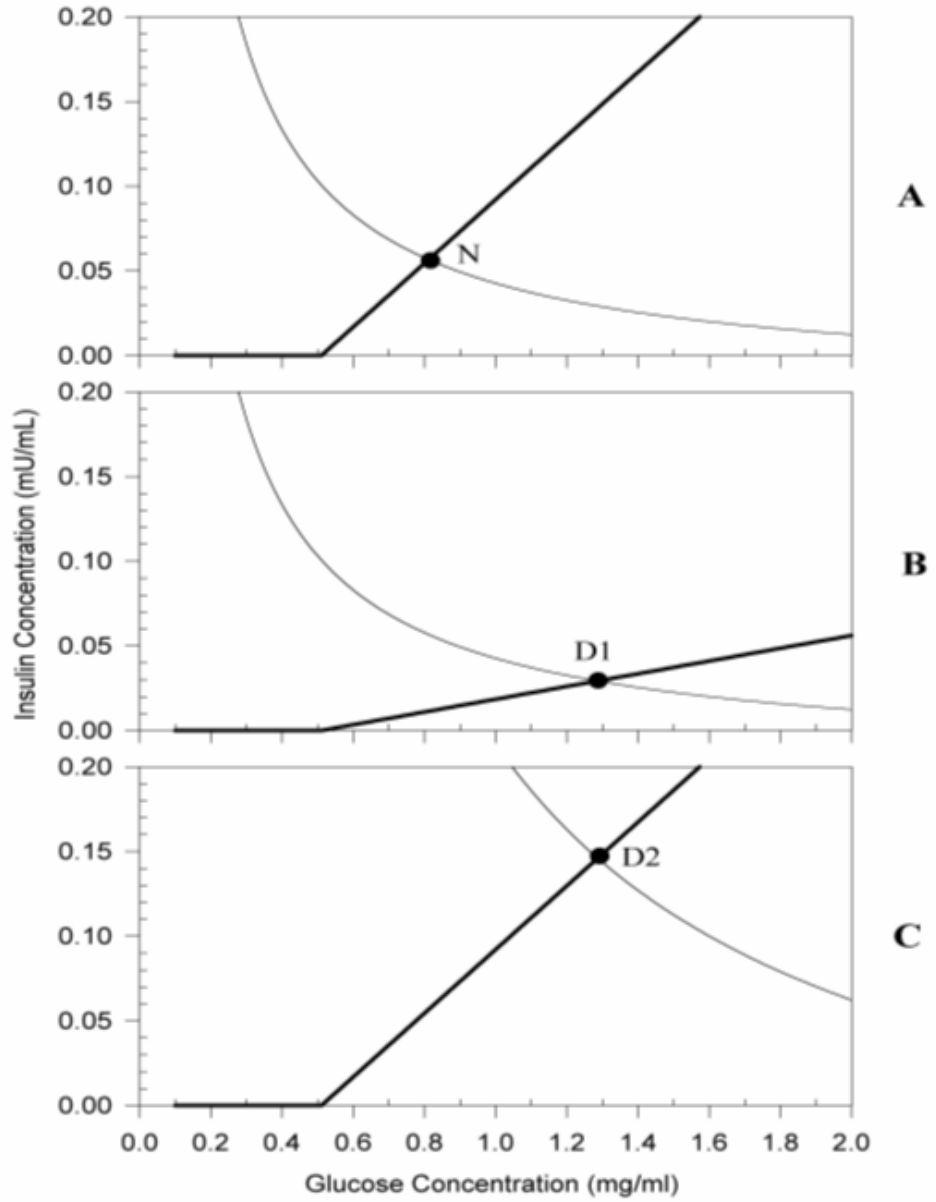

Case A: Normal Adult

- Typical adult parameters:
- θ=2.5 mg/ml
- μ=7200 ml/h
- λ=2470 ml/h
- v=139000 $(mU)^{-1}h^{-1}$
- φ=0.51mg/ml
- β=1430 $mUml(mg)^{-1}h^{-1}$
- α=7600 ml/h
- Q_L=8400 mg/h

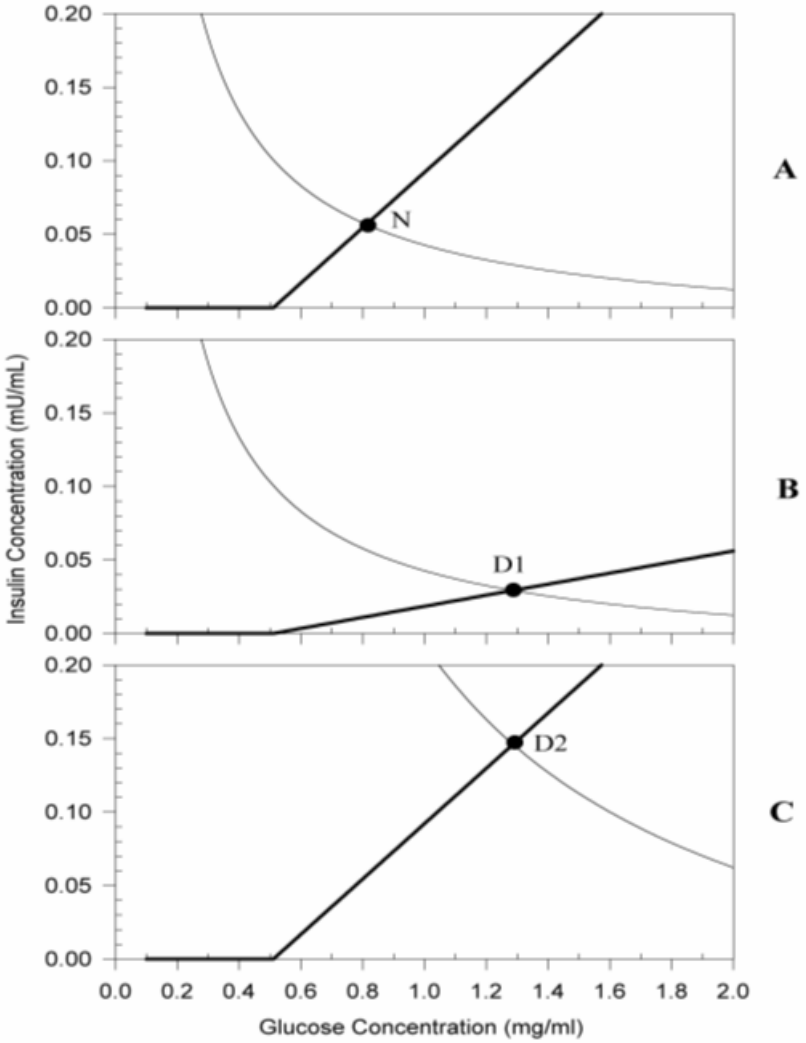

Case A: Normal Adult

- Normal ("N" point) Steady-state solution:
- Glucose steady-state concentration is 0.81 mg/ml
- Insulin steady-state concentration is 0.055 mU/ml.

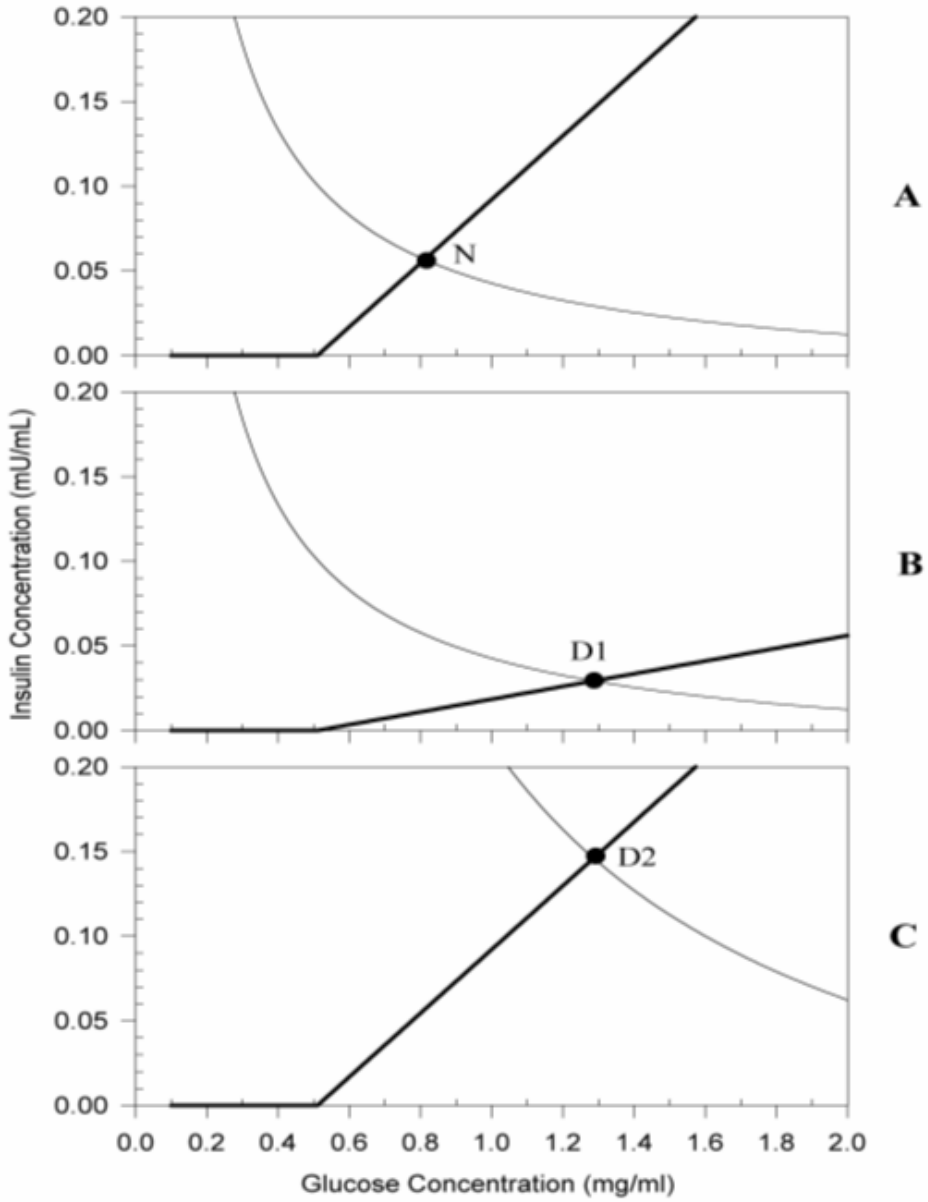

Type-1 Diabetes

- This is insulin-dependent diabetes.
- The main defect is the inability of the islet cells in the pancreas to produce sufficient amount of insulin.
- The most common form of this disorder begins in childhood (“juvenile-onset diabetes”).
- Another form of Type-1 diabetes starts at adulthood. It is known as “ketone-prone diabetes”.

Type-2 Diabetes

- Non-insulin-dependent diabetes.
- The pancreas may be producing normal quantities of insulin, however:
- For some reason there is a drastic reduction in the ability of insulin to stimulate glucose uptake by the body tissues.

Recall: Insulin and Glucose Steady-State Levels (for the Insulin compartment)

$$y = \begin{cases} 0 & x \le \phi \\ \dfrac{\beta}{\alpha}(x-\phi) & x > \phi \end{cases}$$

- Type-1 diabetes can be modeled by “lower-than-normal” value of β.
- In the steady-state y(x) the line has a lower slope.

Case B: Type-1 Diabetes

- The simplest way to model Type-1 diabetes is by lowering β (this is the sensitivity of the insulin response to glucose).
- In the Case B example β is reduced to 20% of its normal value.

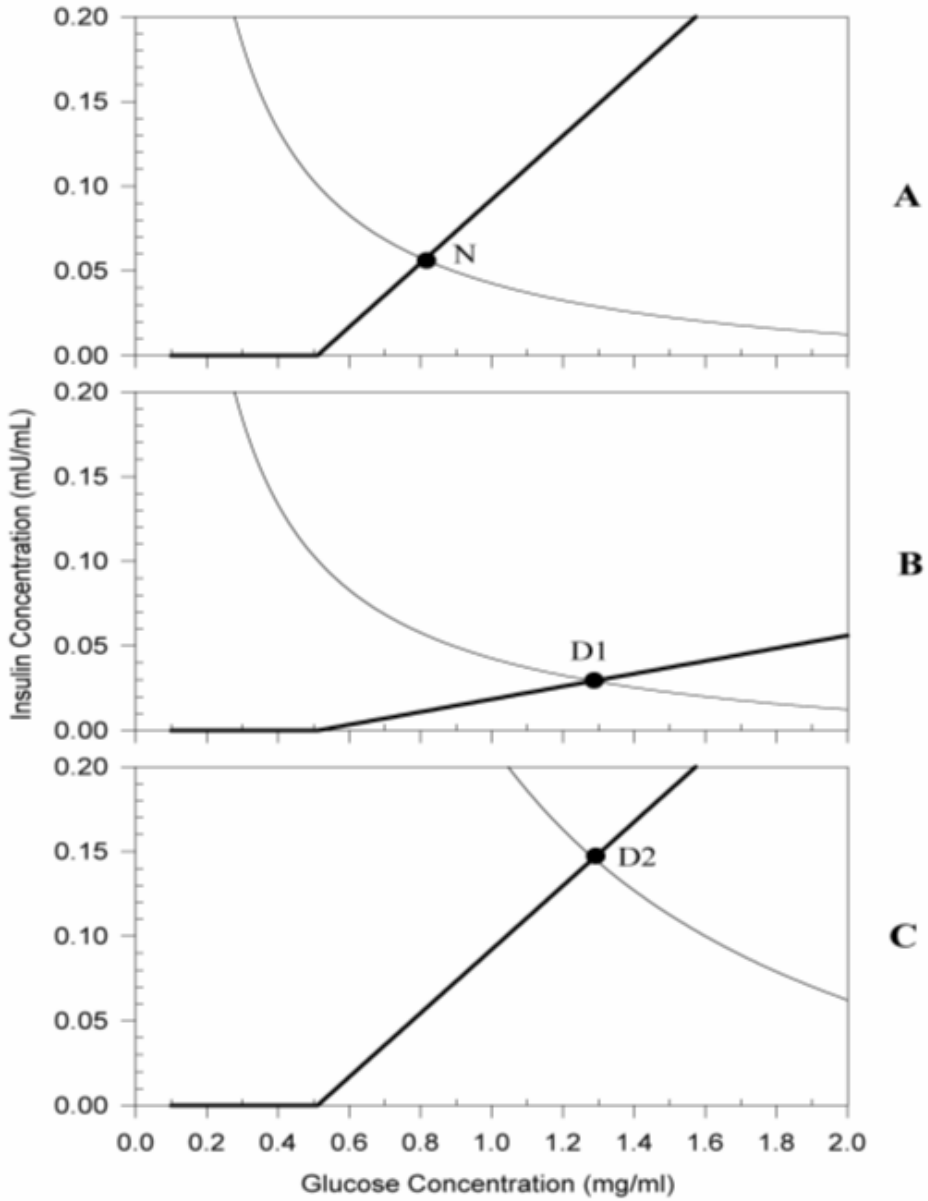

Recall: Insulin Production

$$Insulin_\Pr oduction_Rate = \begin{matrix} 0 & x \le \phi \\ \beta(x-\phi) & x > \phi \end{matrix}$$

- Insulin is produced at a rate that depends on plasma glucose level, which explains the lower steady state value of blood insulin in type-1 diabetes.

Case B: Type-1 Diabetes

- The new steady-state point (denoted as “D1”) illustrates a highly elevated blood glucose concentration of 1.28 mg/ml and a depressed plasma insulin concentration of 0.029 mU/ml.

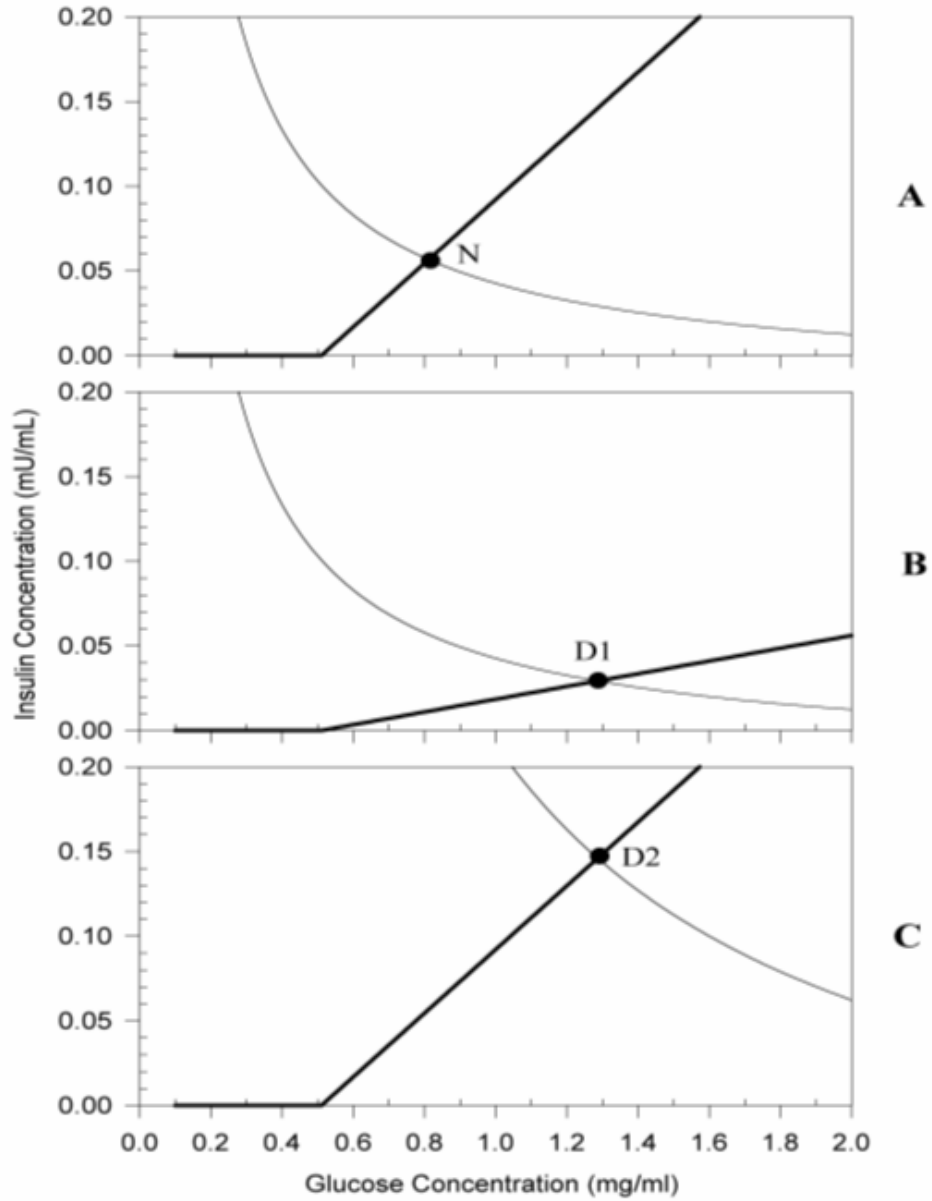

Recall: Blood Glucose Mass Balance

$$Q_L = \begin{cases} \lambda x + \upsilon xy & x \le \theta \\ \lambda x + \upsilon xy + \mu(x - \theta) & x > \theta \end{cases}$$

- A simple way to model Type-2 diabetes is via "lower-than-normal" ν coefficient.
- It causes the steady-state y(x) hyperboles to become elevated.

Case C: Type-2 Diabetes

- The simplest way to model Type-2 Diabetes is via lowering the coefficient v (the constant that multiplies xy in the glucose mass balance equation)

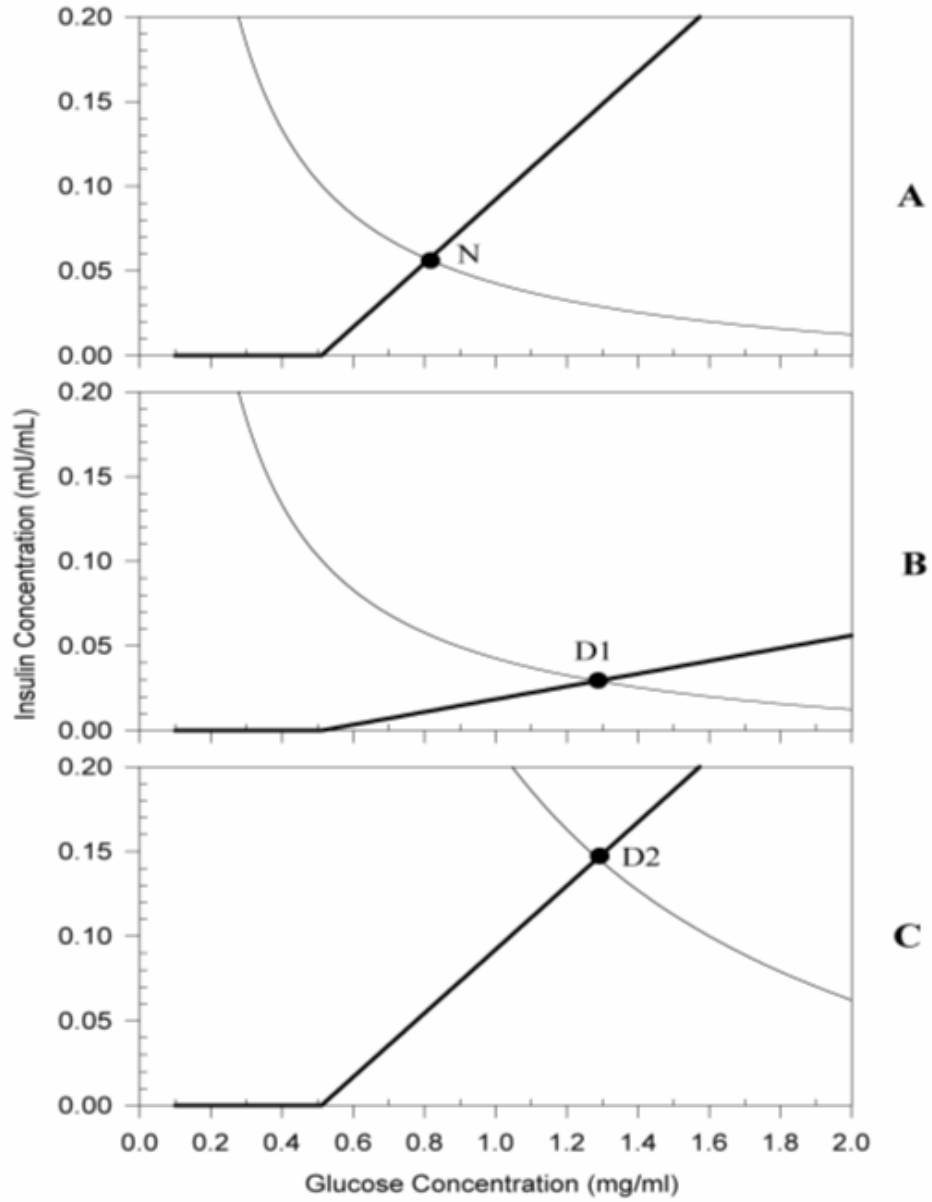

Case C: Type-2 Diabetes

- In the shown example (Case C) the coefficient v was reduced to 20% of its original value.
- The insulin curve was left the same as normal.

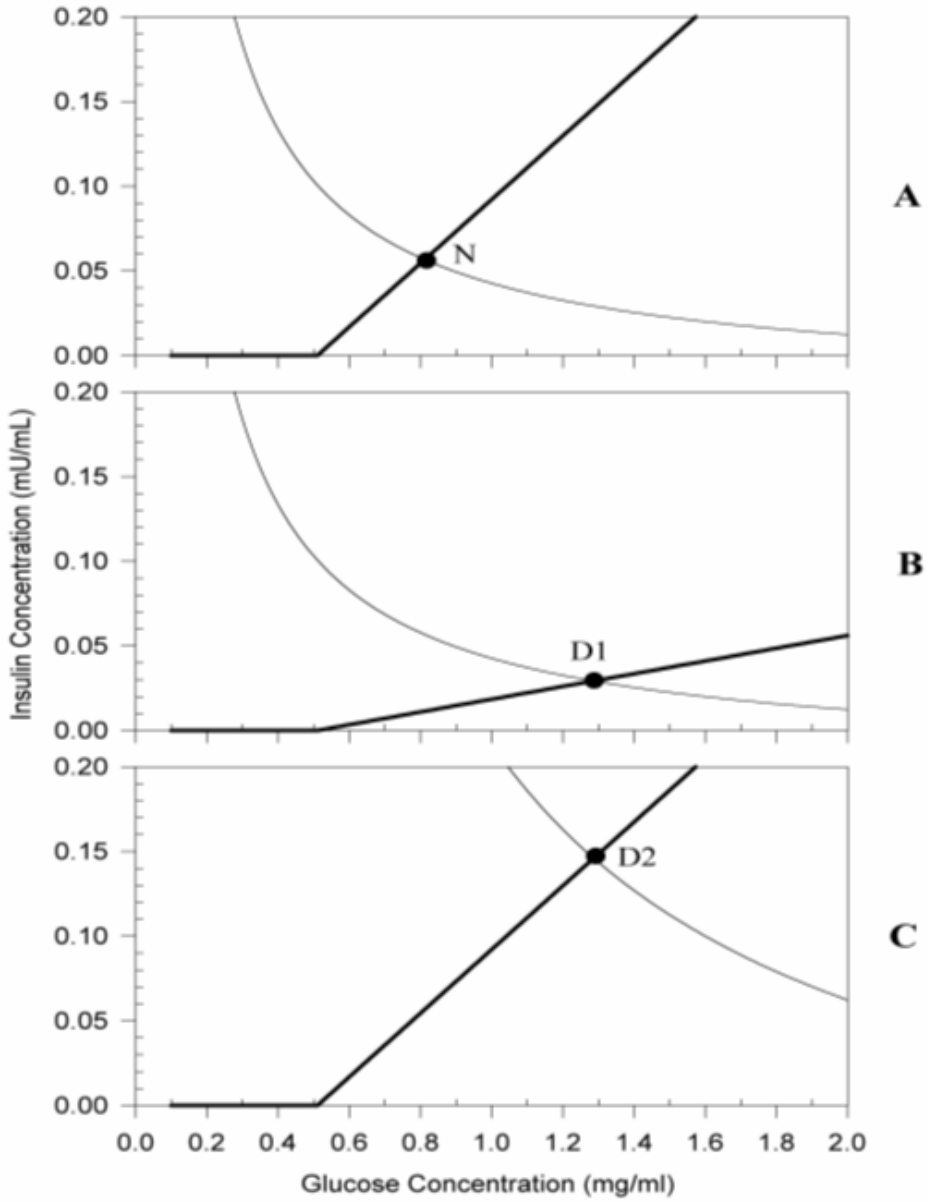

Case C: Type-2 Diabetes

- Lowering of v causes the glucose curve to shift away from the origin.
- Also local slopes of the curve become steeper.
- The new equilibrium is denoted as “D2”.

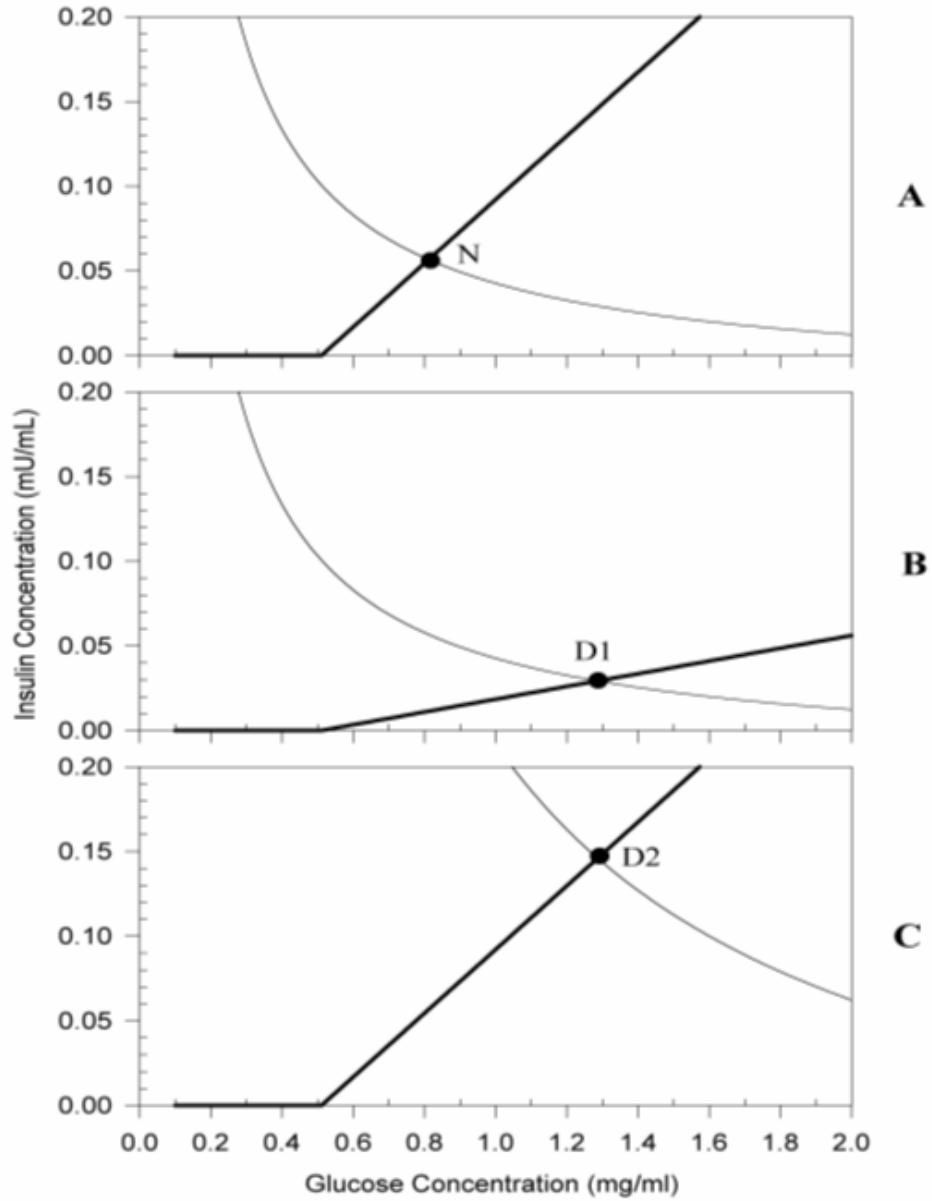

Case C: Type-2 Diabetes

- D2 solution:
- Glucose concentration is elevated to 1.29 mg/ml.
- Insulin solution is also elevated to 0.146 mU/ml (3 times its normal level).

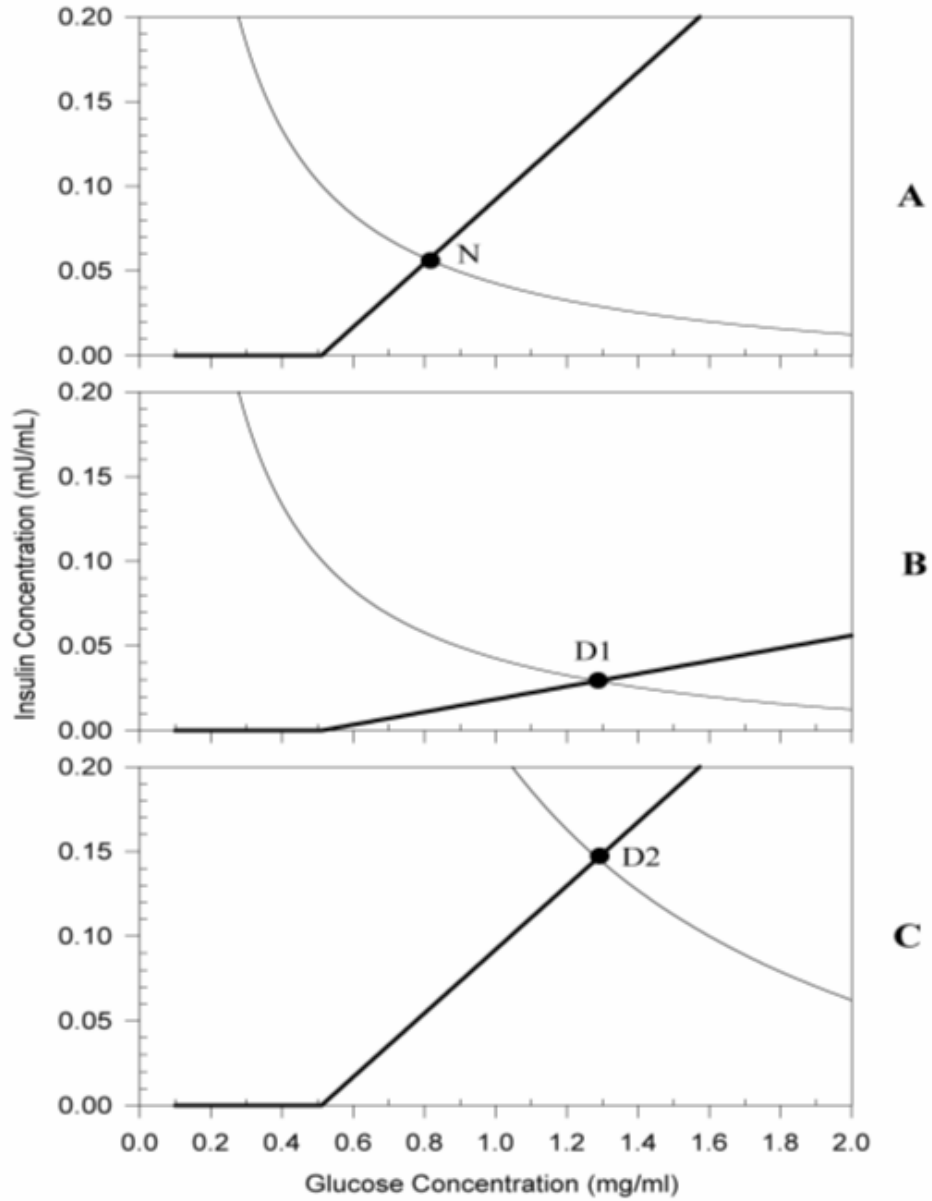

Comments about Diabetes treatment

- Type-1 diabetes is treated via injection of insulin to the blood.
- In Type-2 diabetes, obviously, there is no point in adding any insulin.
- Treatment is done by medications that enhance glucose uptake by the body cells.
- In both type-1 and type-2 diabetes the glucose steady state value x is high. It is fast and easy to measure x(t).
- In type-1 diabetes y is low whereas in type-2 diabetes y is high.
- It is not possible to measure blood insulin y in real time.

Glucose Dynamic Model

$$C_G \frac{dx}{dt} = U(t) + Q_L - \lambda x - \nu x y, \qquad x \le \theta$$

$$C_G \frac{dx}{dt} = U(t) + Q_L - \lambda x - \nu x y - \mu (x - \theta), \qquad x > \theta$$

C_G is the glucose capacitance in the extracellular space.

U(t) represents glucose infused into the blood stream.

Glucose Dynamic Model

$$C_G \frac{dx}{dt} = U(t) + Q_L - \lambda x - \nu x y, \qquad x \le \theta$$

$$C_G \frac{dx}{dt} = U(t) + Q_L - \lambda x - \nu x y - \mu (x - \theta), \qquad x > \theta$$

Meaning: Dynamically, the rates at which glucose is added to or eliminated from the blood are not equal. Only at steady-state they become equal.

Glucose Dynamic Model

$$C_G \frac{dx}{dt} = U(t) + Q_L - \lambda x - \nu x y, \qquad x \le \theta$$

$$C_G \frac{dx}{dt} = U(t) + Q_L - \lambda x - \nu x y - \mu (x - \theta), \qquad x > \theta$$

The above model represents a “glucose tolerance test”.

It may become part of a control model in which one of the controls means is “adding glucose”.

Insulin Dynamic Model

$$C_I \frac{dy}{dt} = -\alpha y, \qquad x \le \phi$$

$$C_I \frac{dy}{dt} = -\alpha y + \beta (x - \phi), \qquad x > \phi$$

C_I is the insulin capacitance of the extracellular space.

In the above there is no “external insulin input” – it can be added, as part of a control scheme.

Summary of the Dynamic Model for a glucose test

Glucose mass balance:

$$C_G \frac{dx}{dt} = U(t) + Q_L - \lambda x - \nu x y, \qquad x \le \theta$$

$$C_G \frac{dx}{dt} = U(t) + Q_L - \lambda x - \nu x y - \mu (x - \theta), \qquad x > \theta$$

Insulin mass balance:

$$C_I \frac{dy}{dt} = -\alpha y, \qquad x \le \phi$$

$$C_I \frac{dy}{dt} = -\alpha y + \beta (x - \phi), \qquad x > \phi$$

Khoo's Simulink Model

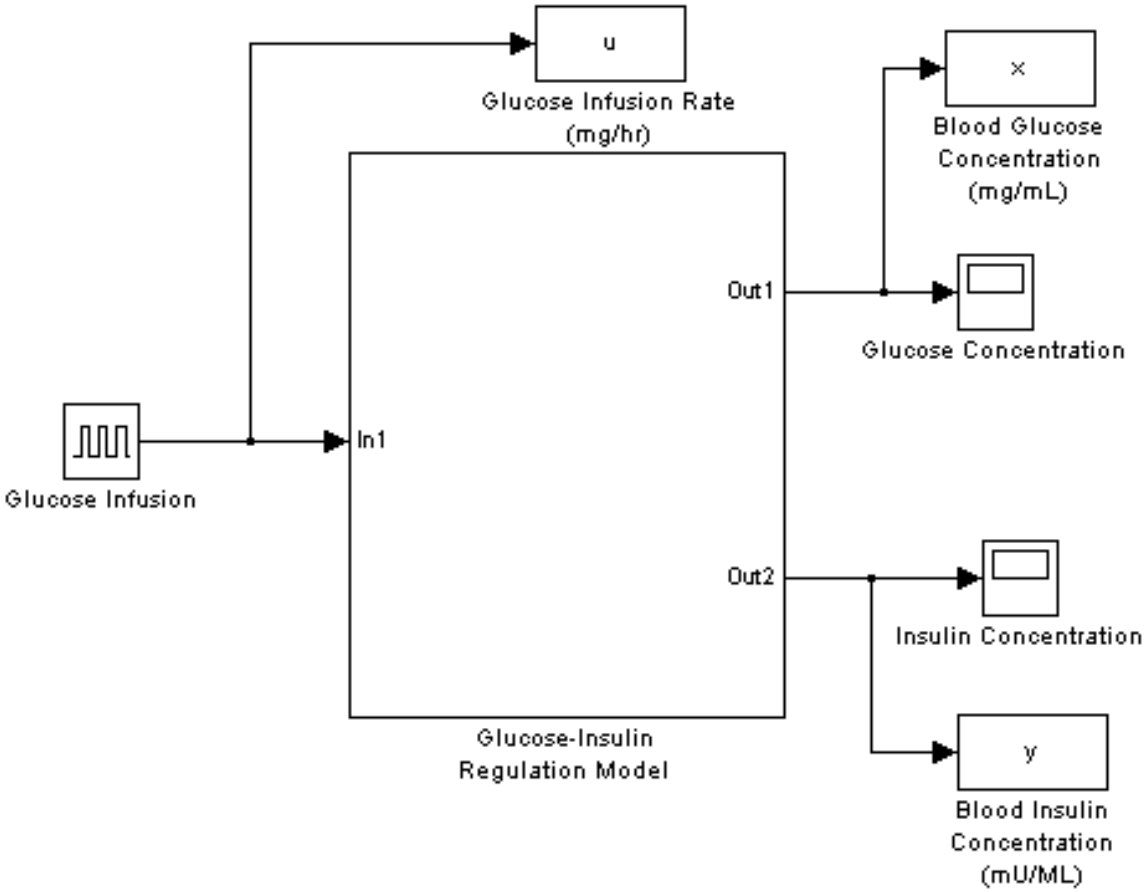

Khoo's Simulink Model

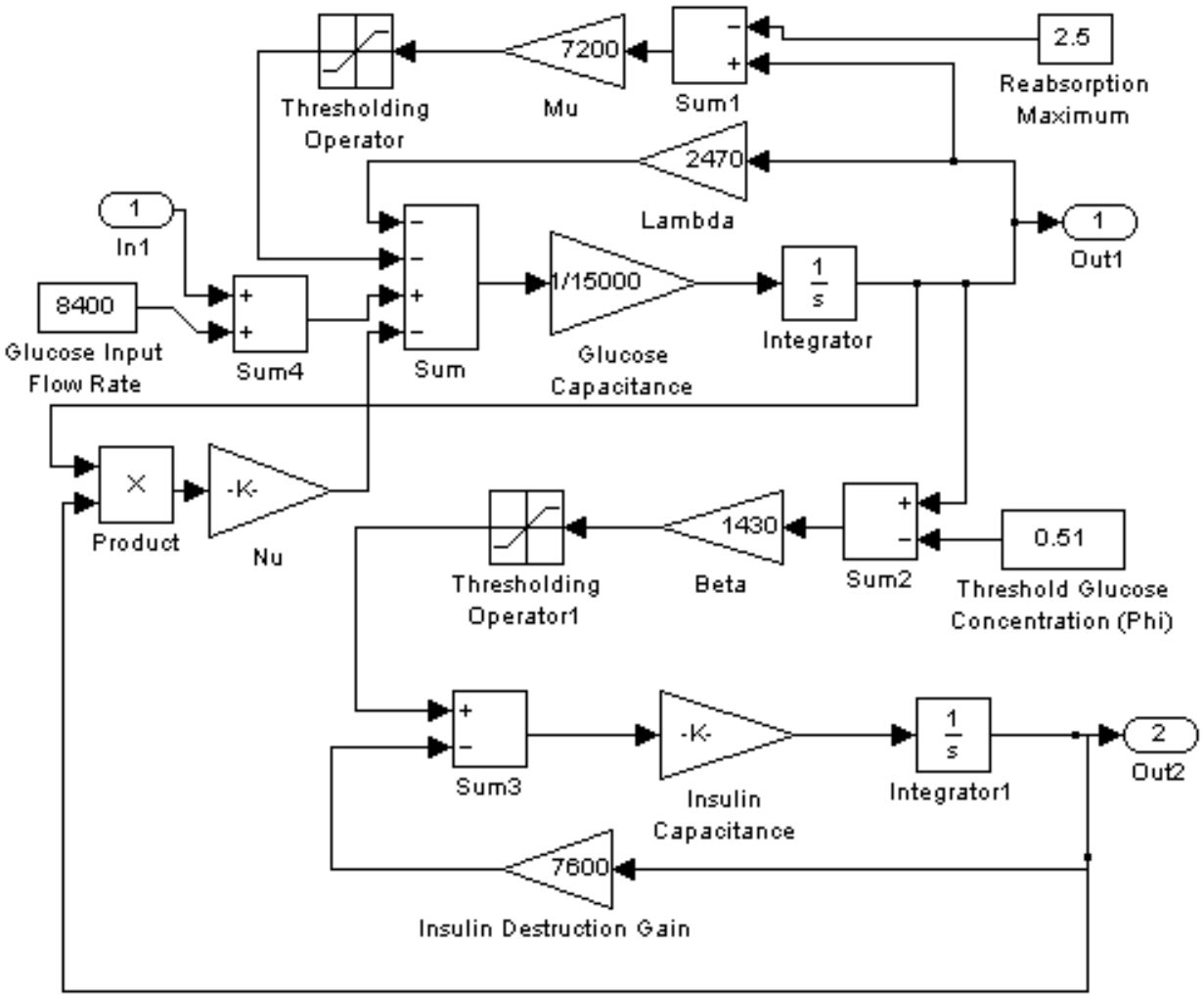

Khoo's Simulation Result

- Pulse response.
- Normal adult – solid curve
- Type-2 diabetes – dashed curve

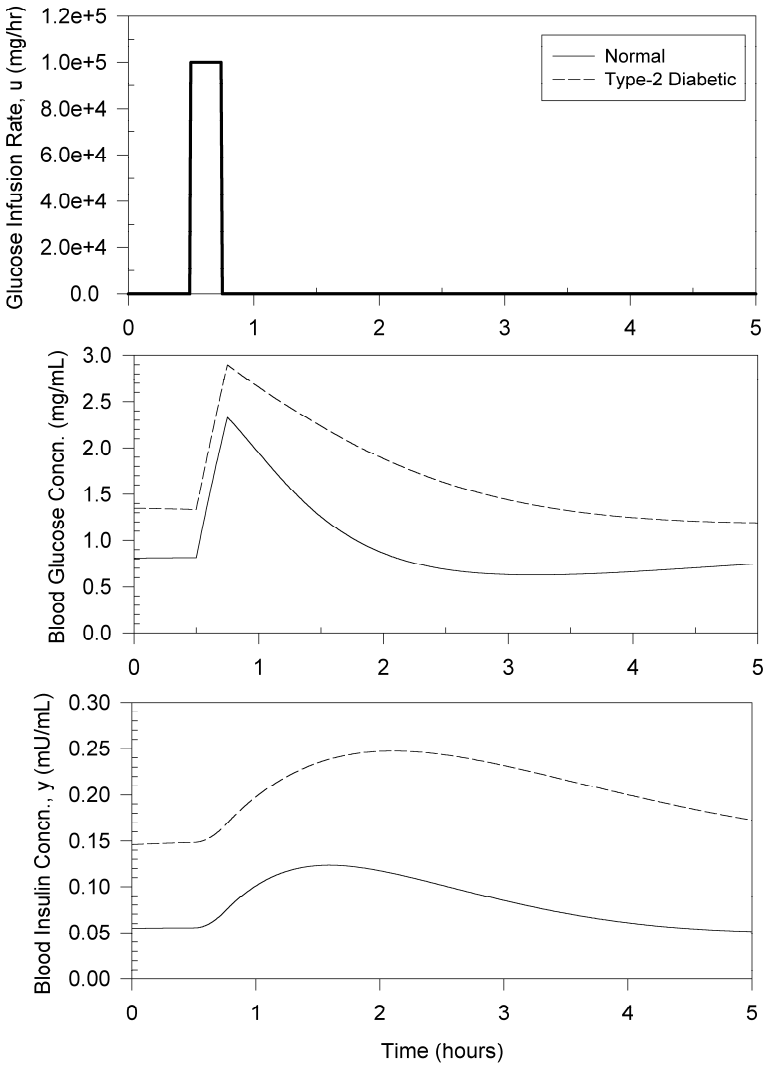

Modified Khoo's model (Z. Roth)

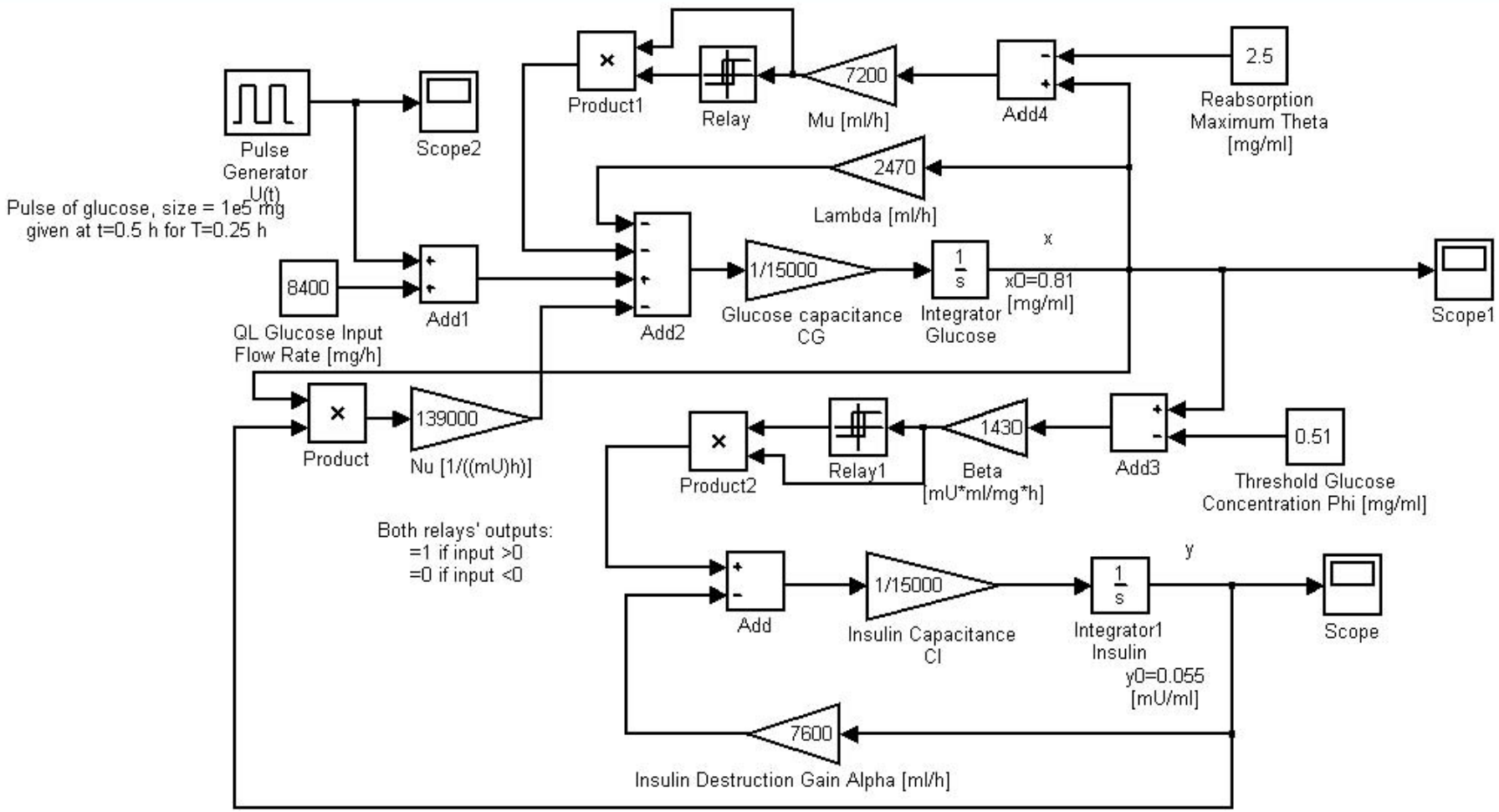

In simulation 1 second represents 1 hour
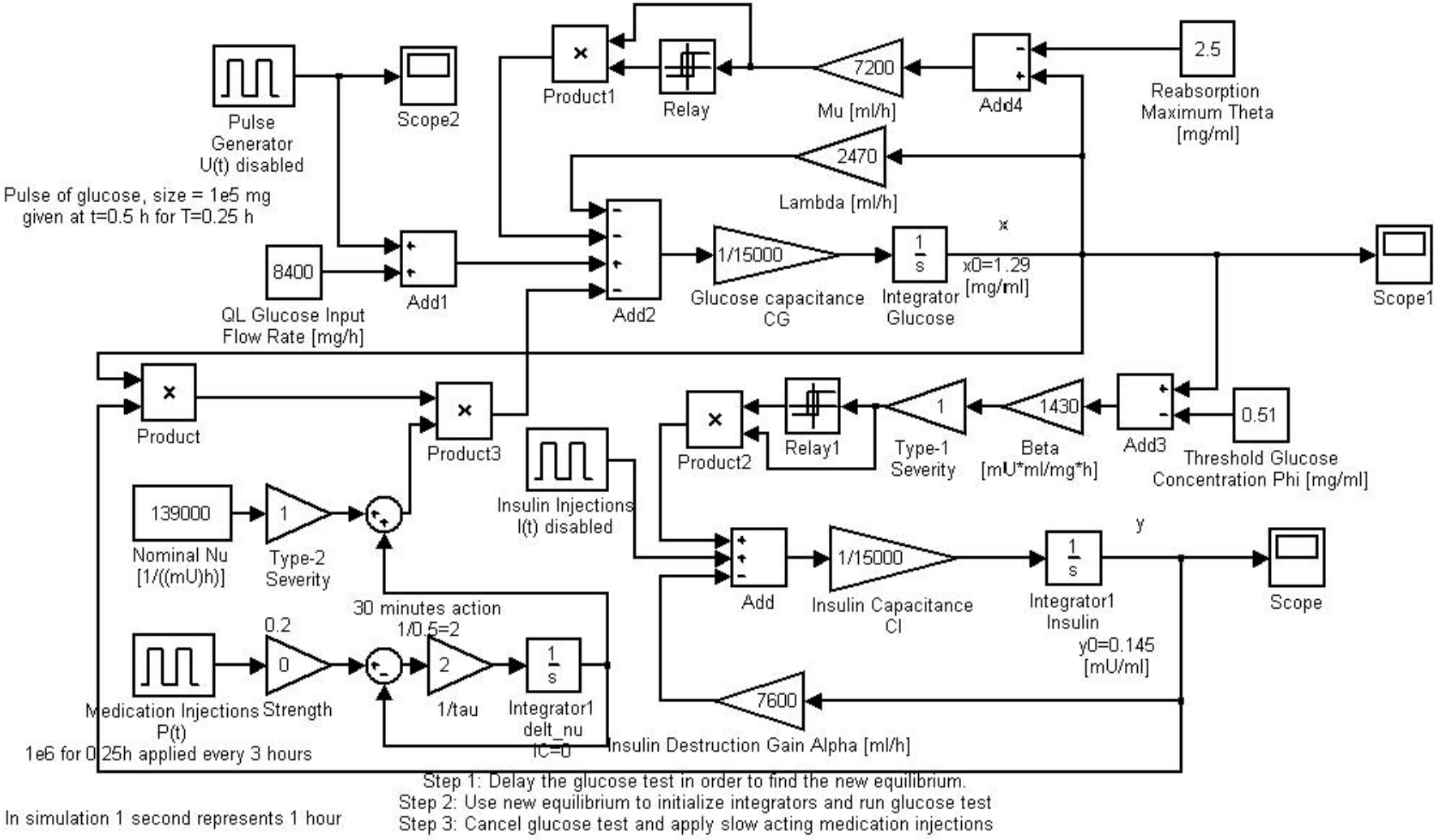
Another modified model