BME 5742 Bio-Systems Modeling and Control

Lecture 7

Simulink Tutorial 2: Simulation of Delay Logistic Models

Simulink new skills: Simulation Configuration Parameters

Three cases of Logistic Delay Models

$$\frac{dy(t)}{dt} = ry(t)[1 - \frac{y(t-T_d)}{K}]$$

Birth – Present
Regulation - Past

$$\frac{dy(t)}{dt} = ry(t-T_d)[1 - \frac{y(t)}{K}]$$

Birth – Past

Regulation - Present

$$\frac{dy(t)}{dt} = ry(t-T_d)[1 - \frac{y(t-T_d)}{K}]$$

Birth – Past

Regulation - Past

Logistic Delay Model Normalized

$$\frac{dy(t)}{dt} = ry(t)[1 - \frac{y(t - T_d)}{K}]$$

$$x = \frac{y}{K} \qquad \tau = rt \qquad D = rT_d$$

$$\frac{dx(\tau)}{d\tau} = x(\tau)[1 - x(\tau - D)]$$

Similarly for the other two cases; Exactly the same normalizing

Enclose-select all blocks, Ctrl-drag to duplicate.

Then modify Fcn blocks, labels and constants

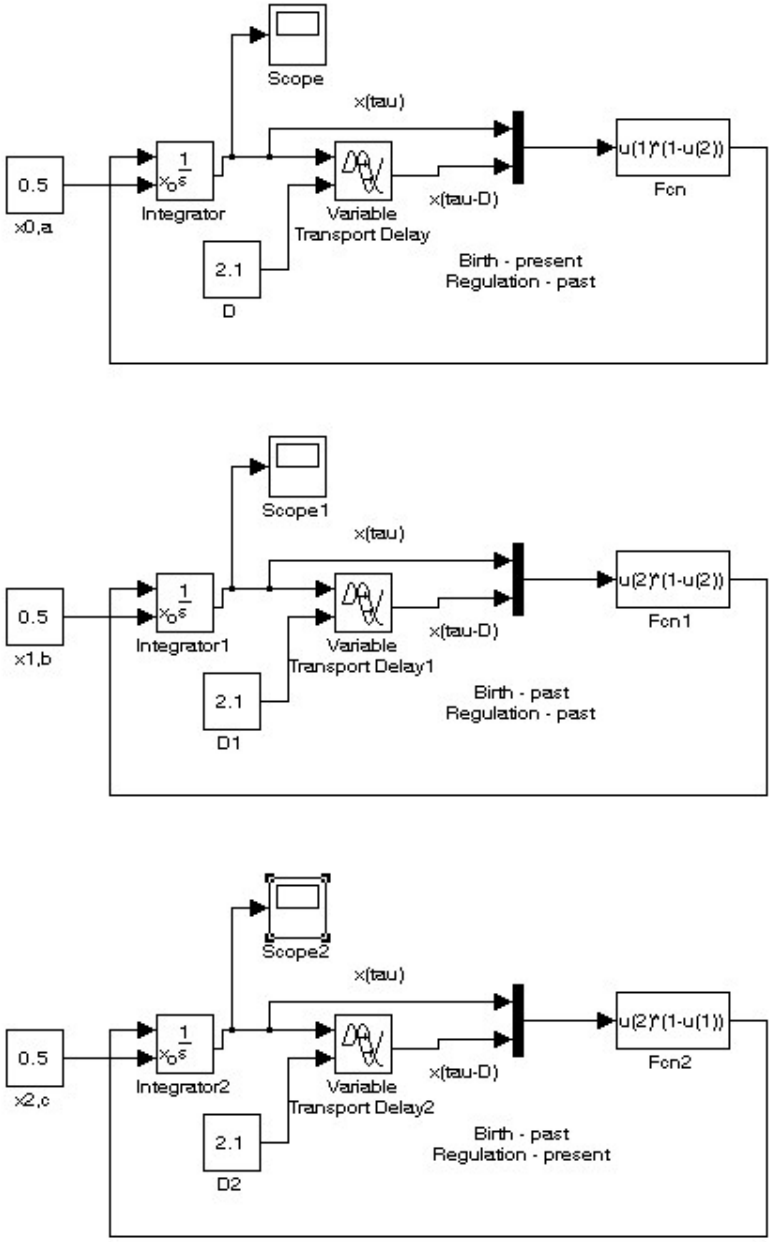

Simulation of delay models

- All such models are extremely sensitive to numerical errors, and special care is needed.
- Need to carefully consider what integration method and other simulation parameters may work best.
- Need to be very suspicious of simulation results correctness (Can a simulation program “lie”? Yes, it can…)

Transport Delay block from Continuous; D=1 and x_0=0.5:

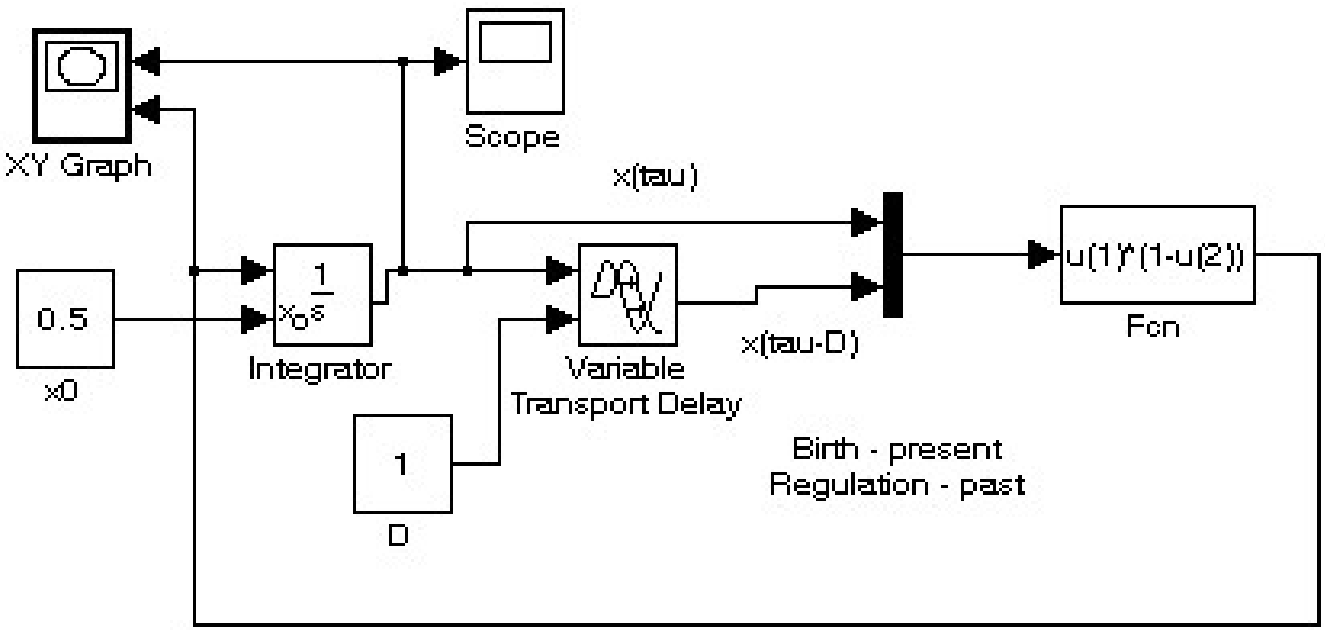

$$x = \frac{y}{K} \qquad \tau = rt \qquad D = rT_d \qquad \frac{dx(\tau)}{d\tau} = x(\tau)[1 - x(\tau - D)]$$

For D=1 and x_0=0.5 we expect x(tau) to converge to x(∞)=1

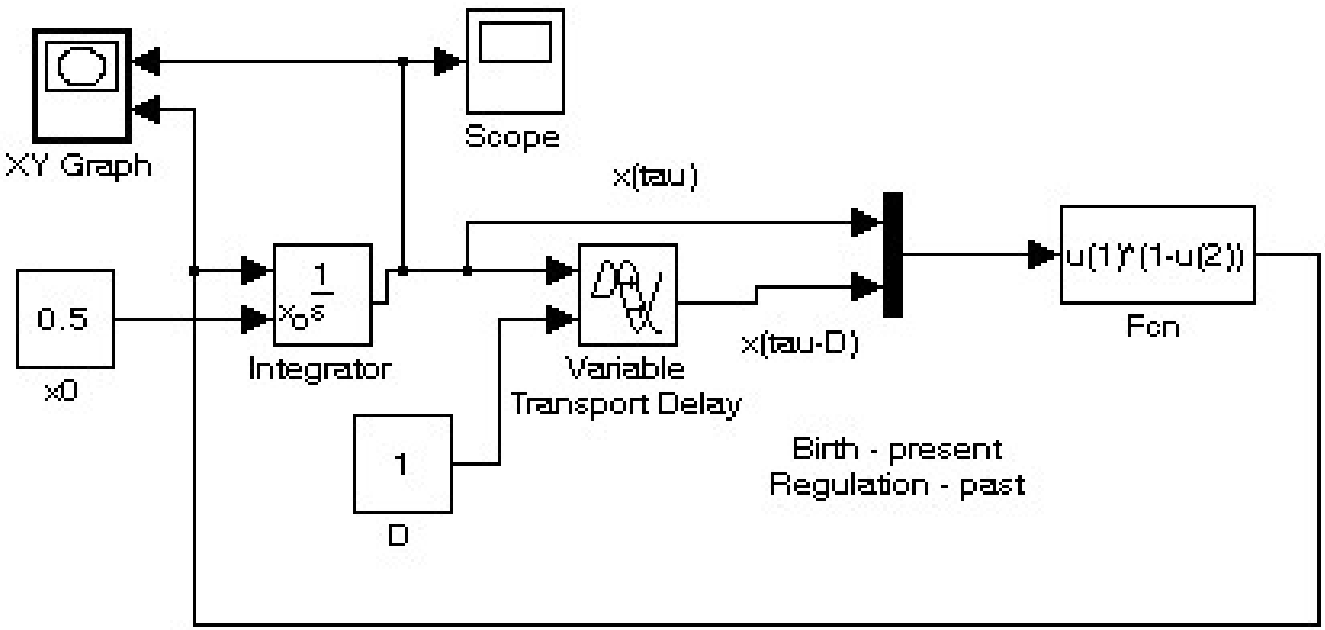

We chose External Initial Condition and Pure Time Delay parameter, using Constant blocks, for convenience of changing those from one run to a next

Default simulation parameters (This is an old version. Watch video for the latest version)

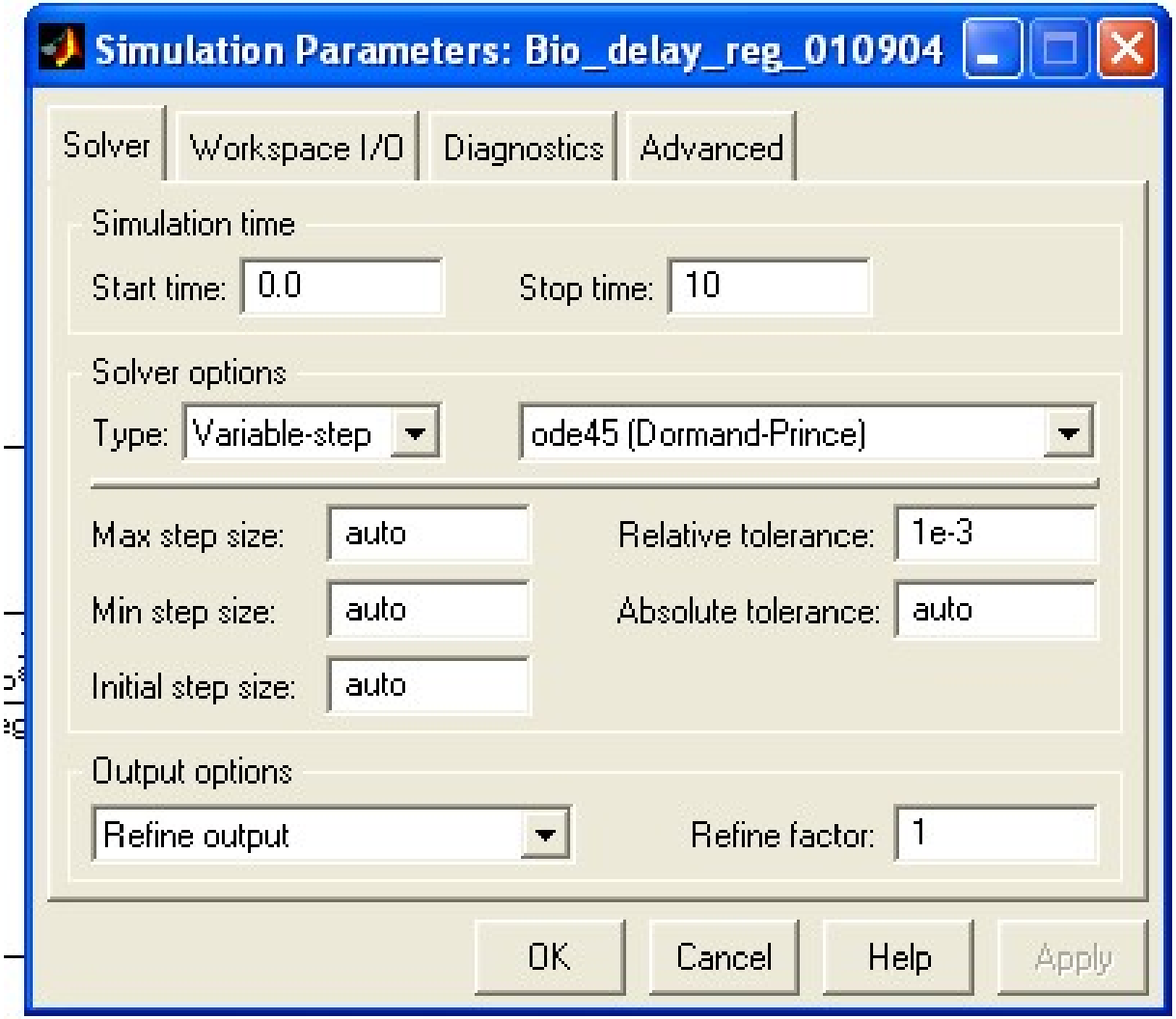

As we run with the default parameters, a XY plot pops up

We see a phase-plane plot that converges to x=1; It would be nice to be able to edit – labels, grid etc.

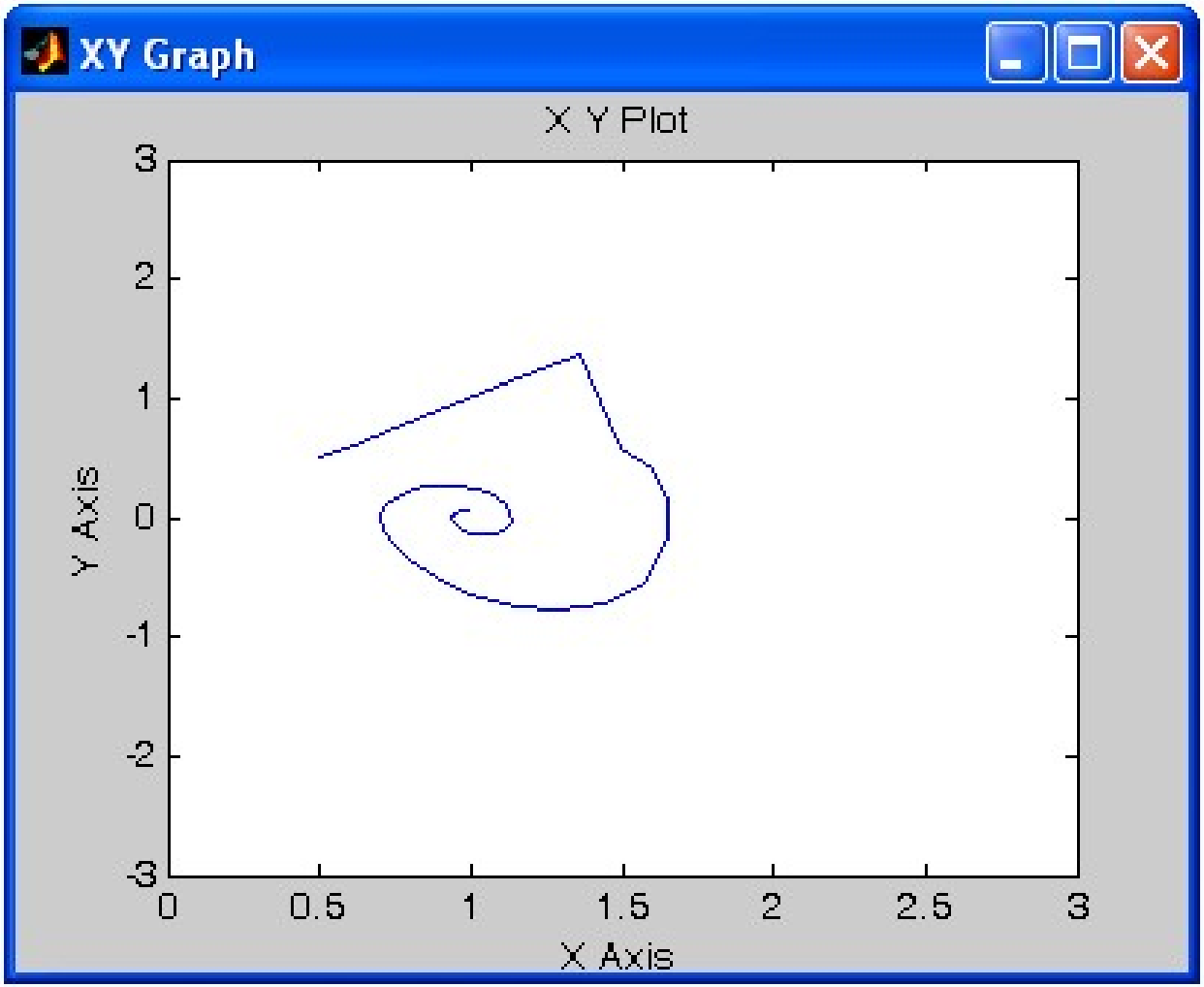

Logistic Delay Model : Simulation with larger value of D

$$\frac{dy(t)}{dt} = ry(t)[1 - \frac{y(t-T_d)}{K}] \quad x = \frac{y}{K} \qquad \tau = rt \qquad D = rT_d$$

$$\frac{dx(\tau)}{d\tau} = x(\tau)[1 - x(\tau - D)]$$

<u>Quoted</u> result: If $D=rT_d > \pi/2$ there is a limit cycle about y=K with a period T which is in the order of magnitude of $T \approx 4T_d$

Logistic Delay Model : Simulation with D=1.6

- Quoted result: (from Murray's book) Oscillation period T≈4.03Td and ymax/ymin≈2.56
- Let's assume that above (quoted from literature) simulation was accurate. We'll use it as a benchmark to help us better fine tune the simulation parameters.
- Run, without changing previous parameters (Refine Output = 3). Final time of T_f=10 proves to be insufficient.
- Double final time, and run again. (If necessary keep doubling until full time response is shown)

D=1.6, Final time = 20; Don't forget to refresh the scope's output by clicking on the binoculars icon

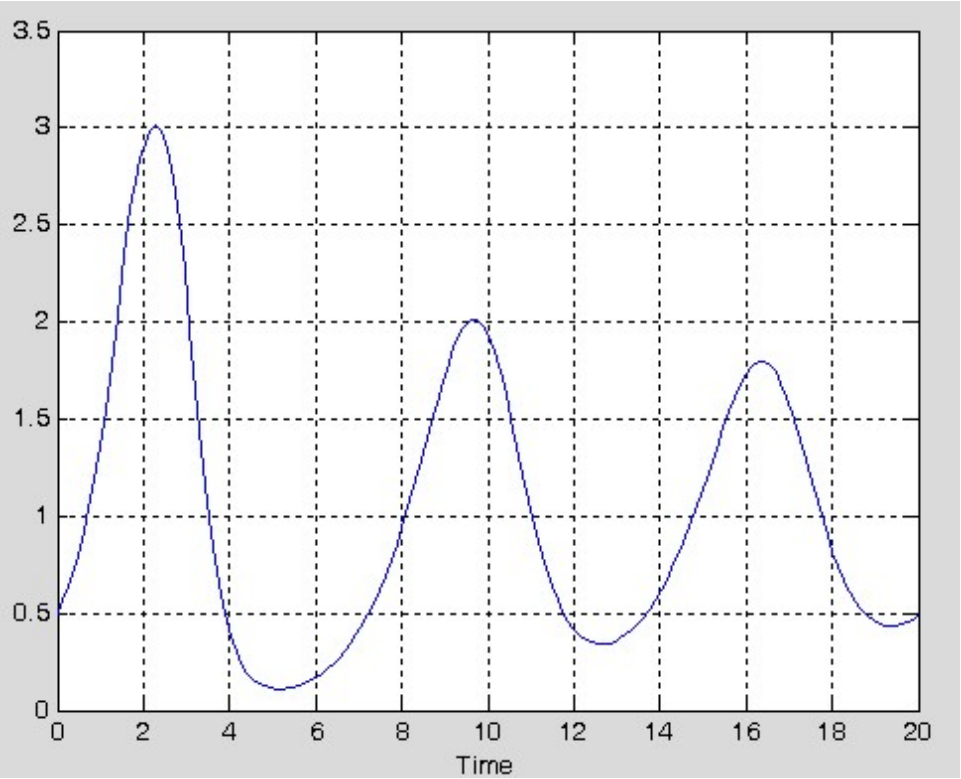

So far it doesn't look periodic. We may still be seeing a transient curve, where at t=20 system is not yet at steady-state oscillation.

Successive modifications of simulation parameters:

- Double final time from T_f=20 to T_f=40 → still no steady state. However, curve again looks "grainy" – Increase Refine Output to 10.
- Two more parameters to watch for: a) Delay time buffer – increase default setting of 1024 to, say 10240, and see if response looks the same, b) Scope's buffer size (in Data History) – increase from 5000 to larger values, if curve stops in mid-way

An old rule of thumb for fixed-step-size numerical integration:

- In the old days, when all numerical integration methods employed a fixed numerical integration step-size, the choice of “best” step size was most critical.
- The smaller the step is, the more accurate the simulation, at the expense of slow computation and massive data storage.
- <u>Rule:</u> Run repeatedly, and gradually decrease step size. As long as output changes shape, the step size is still too large. Keep decreasing.
- At some point output will stay the same, no matter what step size is. These steps are good.

With variable-step numerical integration, still need to watch the Relative Tolerance parameter, set by default to 1e-3

- At any point, if we don't trust the result that we see, we can try to run again, with a smaller value of Relative Tolerance: 1e-4, 1e-5, 1e-6,… , and watch if result is affected.
- Precaution: May need to increase buffer size of the delay block, and watch if there is any change, otherwise results may still be wrong.

History of steps taken: As T_f grew to 80, x(t) converged to 1, which disagreed with benchmark. Result below was obtained for Relative Tolerance of 1e-6, after zooming-in

Compare steady-state parameters to benchmark: $T \approx 7 = 8.75T_d$, Peaks ratio = 1.36/0.68=2

Big differences!

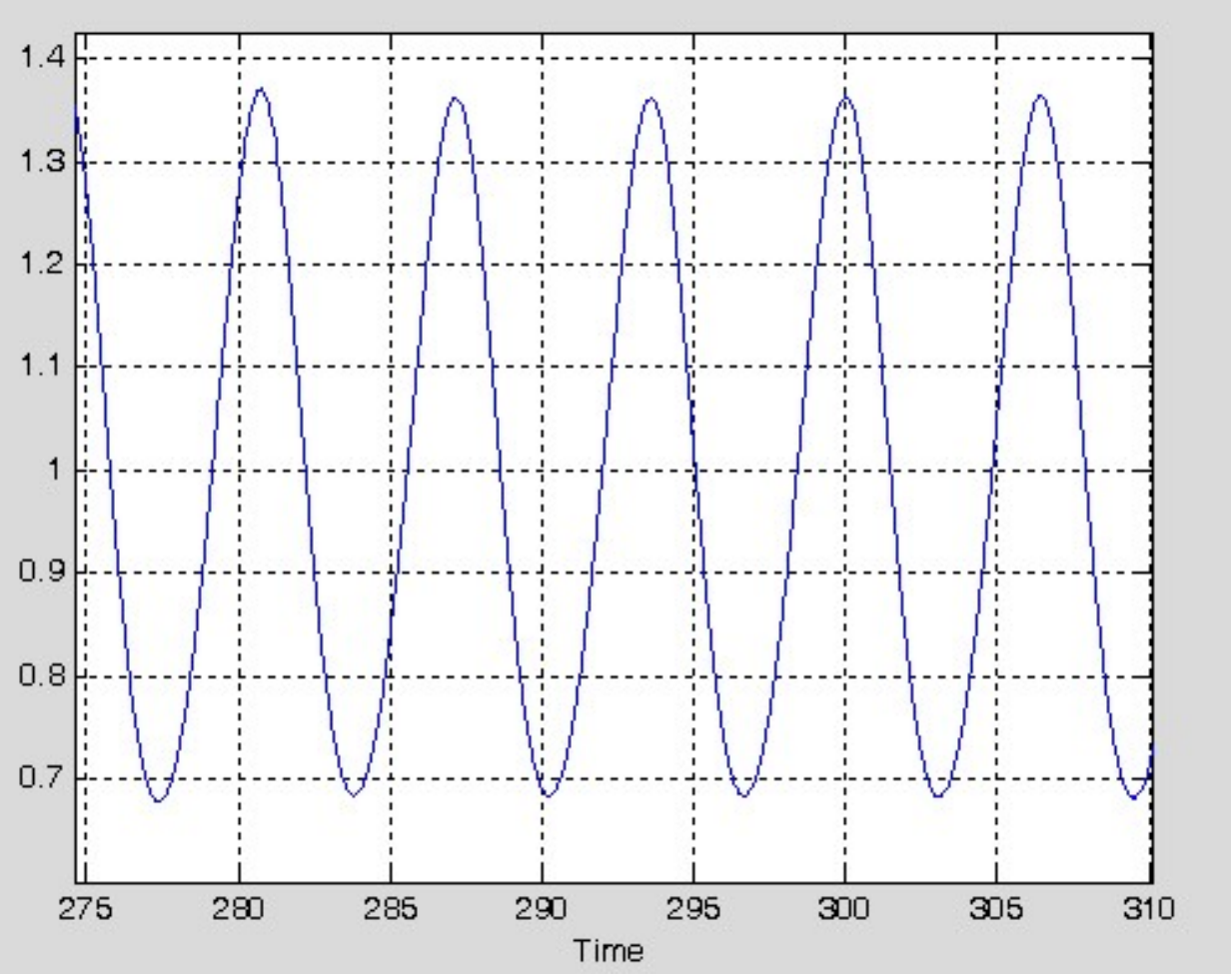

Enclose-select all blocks, Ctrl-drag to duplicate.

Then modify Fcn blocks, labels and constants

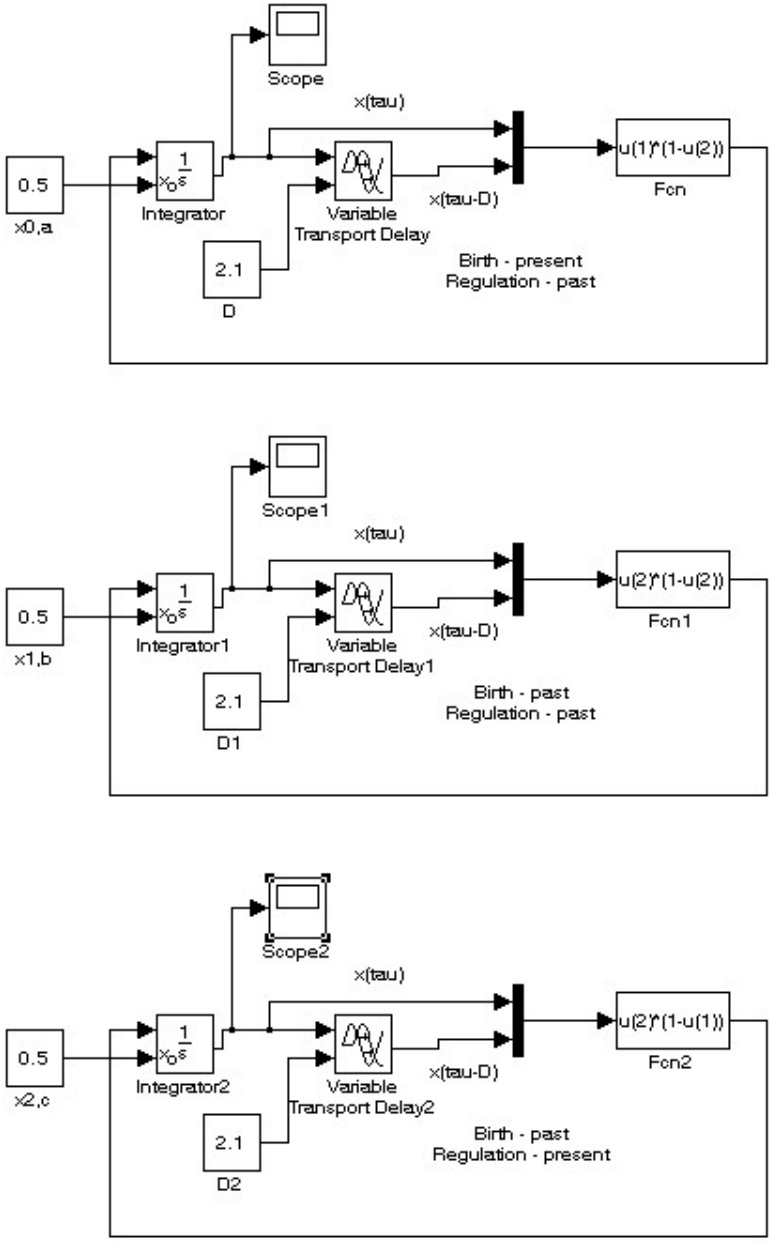

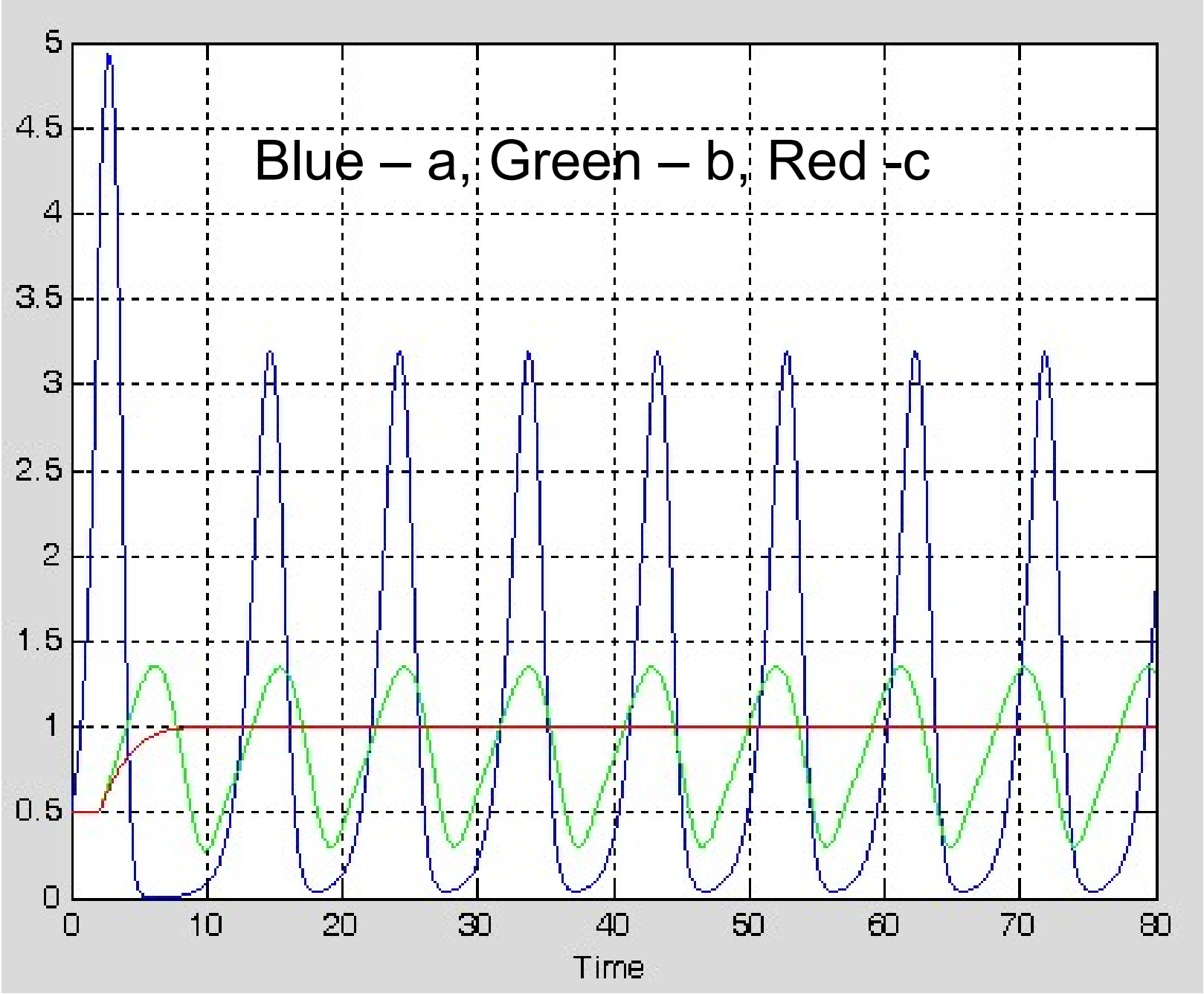
Blue – a, Green – b, Red -c
5
4.5
4
3.5
3
2.5
2
1.5
1
0.5
0
0
10
20
30
40
50
60
70
80
Time