# BME 5742 Biosystems Modeling and Control

Lecture 34

## Hodgkin-Huxley Model for Nerve Cell Action Potential

Part 1

# References

- Hoppensteadt-Peskin Ch. 3 – for all the mathematics.
- Cooper's "The Cell": Nice illustrations of the sodium and potassium channels.

# The Neuron

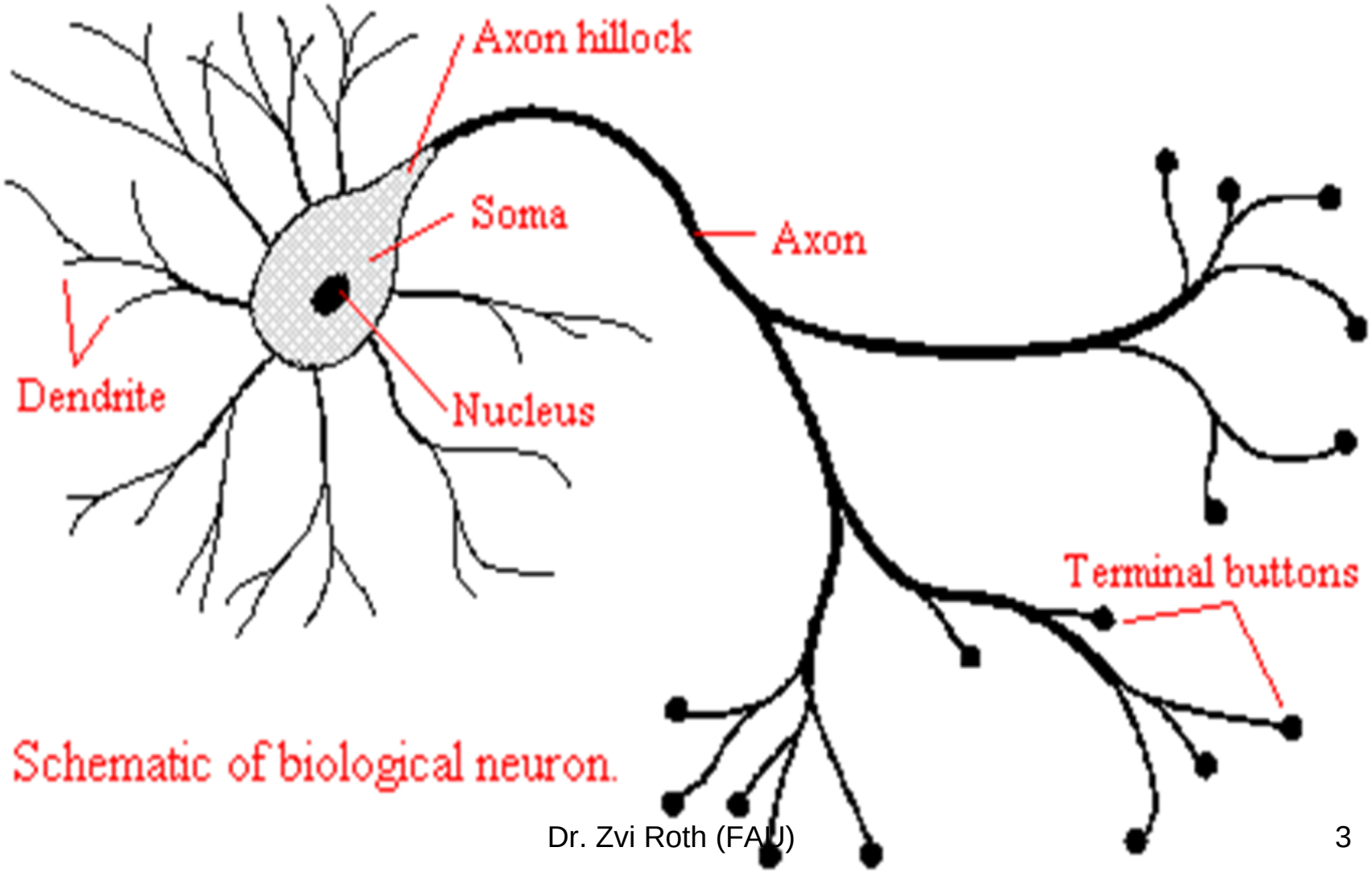


Schematic of biological neuron.

# The Neuron

$V_m$ change propagates
to cell body, axon hillock.

Axon hillock integrates all inputs;
generates spike if $V_m$ > threshold.
Spikes = Action Potentials.
Spikes travel along axons.

Dendrites collect inputs.

Input either ↑ or ↓
membrane potential, Vm.

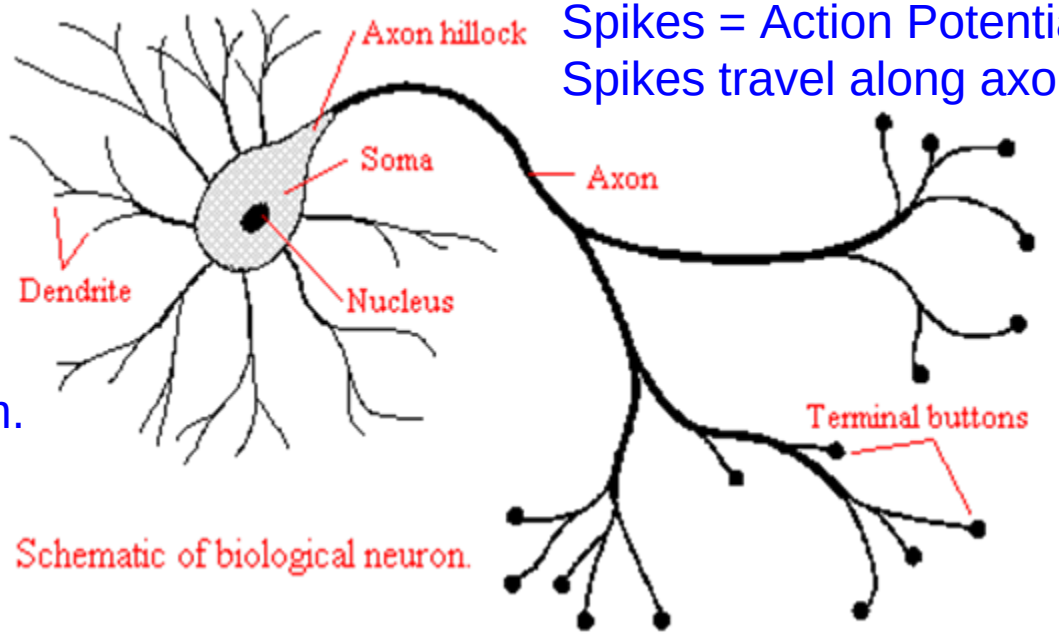


Schematic of biological neuron.

Spike propagates to synapse.

# Connection to the Next Neuron(s)

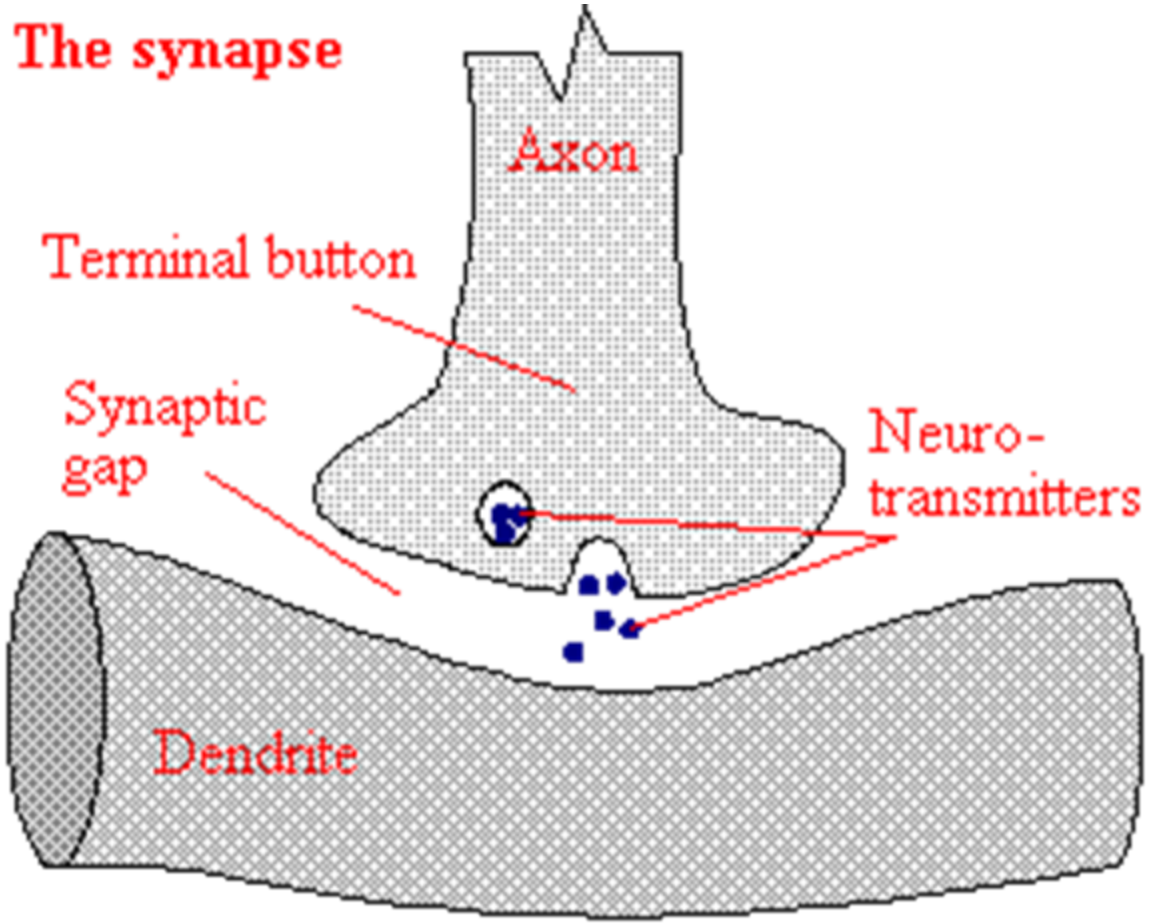

# Qualitative Facts:

- A given dendritic input either raises or lowers membrane potential.
- Elevated membrane potential raises the rate of spike generation.
- Lowered membrane potential lowers the rate of spike generation.
- Spikes are largely *transparent* in the process. Spikes may be all-or-none, but information is transferred as a continuous signal.

# Pulses Information

- Axons are highly specialized “wires” that conduct the neurone's output signal to the target cells - up to 10,000 in some cases.
- The majority of nerve cells encode their output as a series of brief voltage pulses, also referred to as *action potentials* or *spikes*.
- The pulses originate at or close to the cell body of nerve cells and propagate down the axon at constant velocity and amplitude.
- Hodgkin and Huxley modelled the initiation and propagation of these action potentials in the giant axon of a squid.

# Circuit Model of Cell Membrane Channels

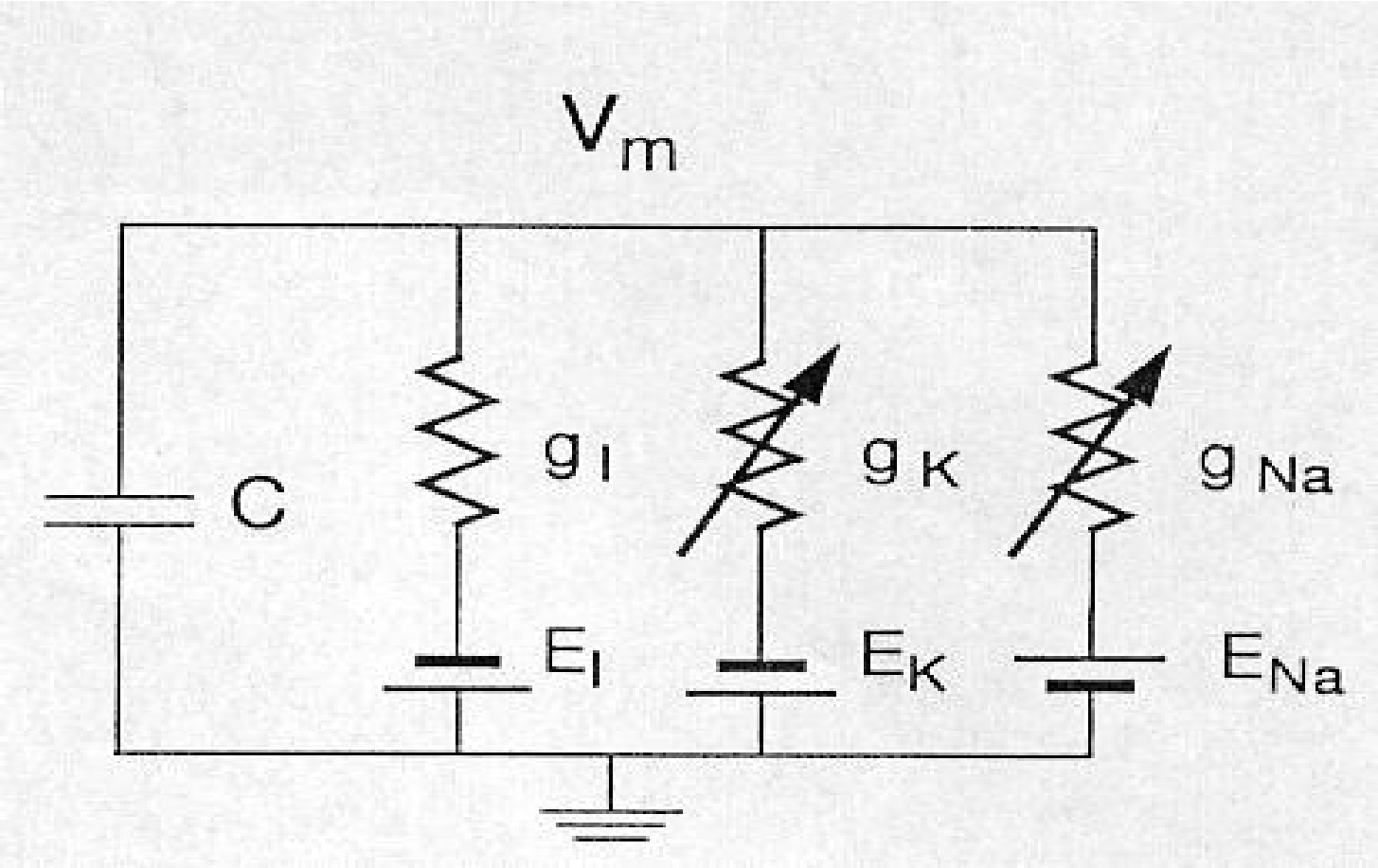

# Circuit Description

- The membrane potential is determined by three conductances:
  - voltage-independent leak conductance $g_{Cl}$.
  - voltage dependent sodium conductance $g_{Na}$.
  - voltage dependent potassium conductance $g_K$.
- The conductances are in series with voltage sources, the values of which correspond to the respective reverse potentials of the ionic currents, $E_{Cl}$ , $E_{Na}$ , $E_K$ .

# Circuit Description (cont'd)

- The potential of the ICF is taken as a zero voltage reference.
- Before stimulation of a membrane patch, the membrane resting voltage is about -65mV and $g_{Na}$ and $g_K$ are almost fully inactive, $g_K$ is still >> $g_{Na}$.
- At this point in time, the membrane is largely dominated by the leak current and residual potassium current.

# Simulation Results

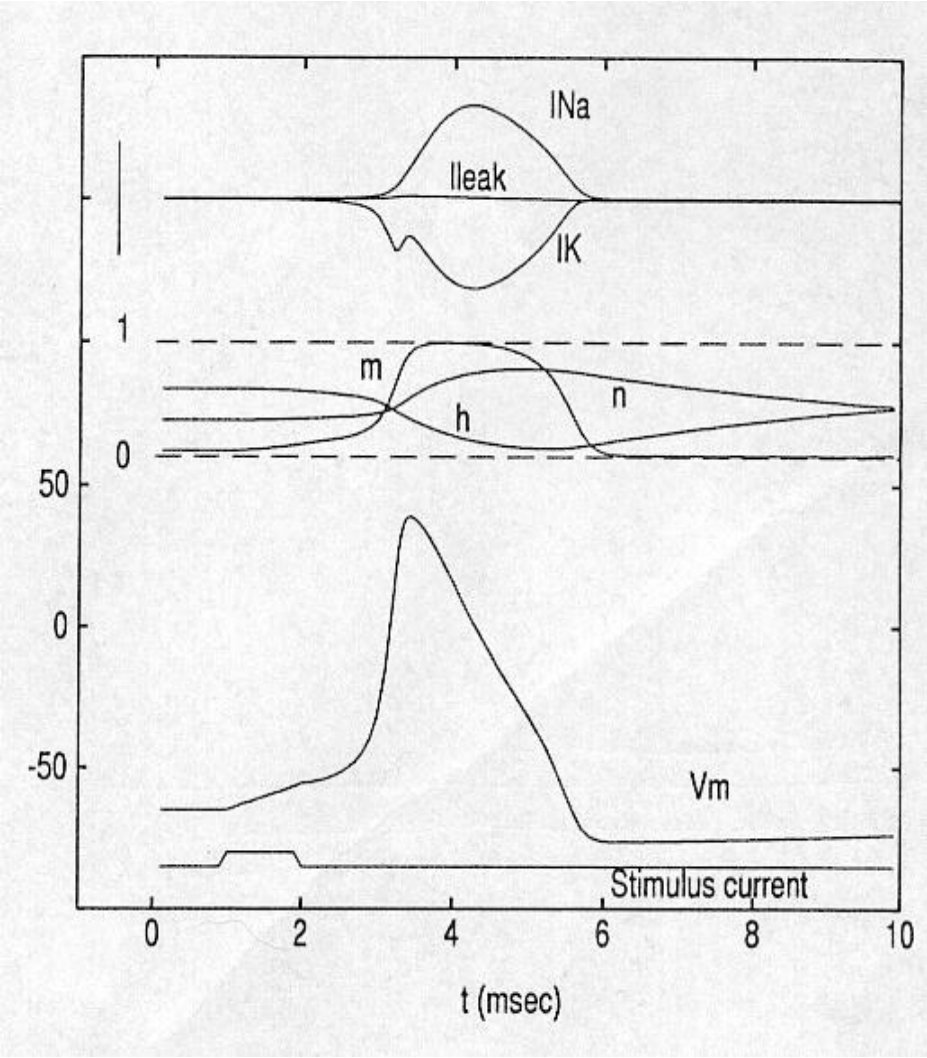


- The applied current slowly depolarizes the membrane by charging up the capacitance.
- As $V_m$ approaches the threshold ≈ -50mV, sodium channels begin to open, the resultant flow of $N_a$ ions depolarizes the membrane further.
- The state variables *m*, *h*, and *n* describe the action of the grating particles.

# Simulation Results

- Two events occur to reverse $V_m$ about 1ms later.
  - The sodium channels conductance deactivates.
  - Potassium channels open causing an outward current.
- The potassium current pulls $V_m$ to below minus 65mV, (hyperpolarisation), but it also deactivates allowing $g_L$ to return it to rest.

# Now let's delve into the mathematics:

- We shall build up on the electrical-chemical-osmotic cell volume control model presented in "Ion Movement in Cells" lecture, with some changes:
- Due to the fast electrical events (in the time scale of milliseconds), we can no longer neglect membrane capacitance effect.
- There is no steady-state→ Ionic currents do not go to zero.

# Cell Membrane Capacitance Effect

$$Cv = (Vq[Na^+]_i + Vq[K^+]_i - Vq[Cl^-]_i - xzq)$$

$$C\frac{dv}{dt} = \frac{d}{dt}(Vq[Na^+]_i + Vq[K^+]_i + V(-q)[Cl^-]_i - xzq)$$

$$\Rightarrow C\frac{dv}{dt} = -I_{Na} - I_K - I_{Cl}$$

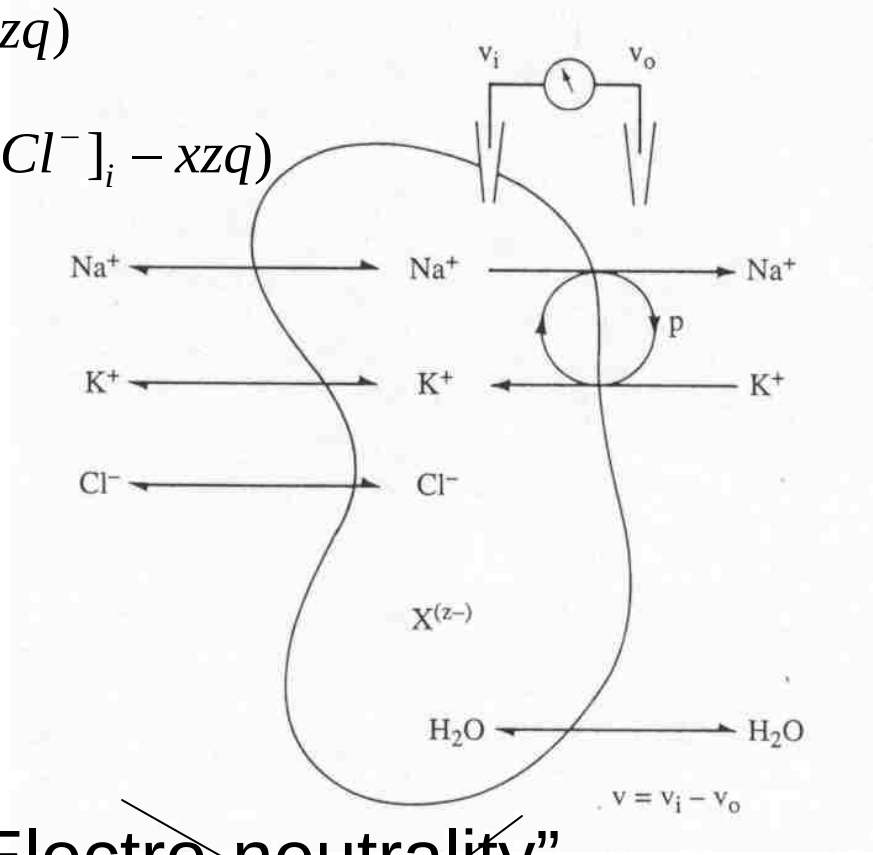


Recall:

$$I_{Na} = g_{Na}(v - \frac{KT}{q}\ln(\frac{[Na^+]_o}{[Na^+]_i})) + pq$$

$$I_K = g_K(v - \frac{KT}{q}\ln(\frac{[K^+]_o}{[K^+]_i})) - pq$$

$$I_{Cl} = g_{Cl}(v + \frac{KT}{q}\ln(\frac{[Cl^-]_o}{[Cl^-]_i}))$$

~~"Electro-neutrality" assumption is to take C→0.~~

# Cell Membrane Capacitance Model

$$C\frac{dv}{dt} + g_{Na}(v - E_{Na}) + g_K(v - E_K) + g_{Cl}(v - E_{Cl}) = 0$$

Where:

$$E_{Na} = \frac{KT}{q}\ln\left(\frac{[Na^+]_o}{[Na^+]_i}\right)$$

$$E_K = \frac{KT}{q}\ln\left(\frac{[K^+]_o}{[K^+]_i}\right)$$

$$E_{Cl} = \frac{KT}{-q}\ln\left(\frac{[Cl^-]_o}{[Cl^-]_i}\right)$$

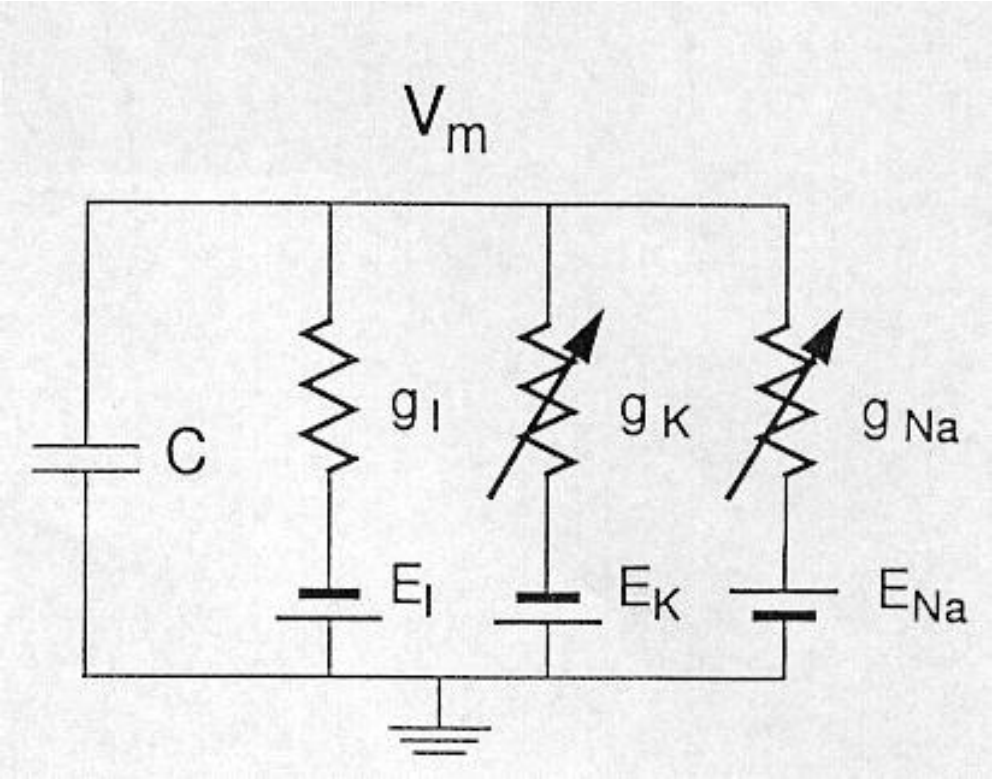


Pump currents cancelled out due to 1:1 approximation

# Simplifying Assumption

- Cell is large enough, and ion fluxes are small enough, so that ICF ion concentrations change only slightly during an action potential.
- There are no short-time-scale large swings in ions concentration → We can treat the potentials $E_K < E_{Cl} < 0 < E_{Na}$ as given constants.

# Action Potential Model

$$C\frac{dv}{dt} + g(v - E) = 0$$

$$g = g_{Na} + g_K + g_{Cl}$$

$$E = \frac{g_{Na}E_{Na} + g_K E_K + g_{Cl}E_{Cl}}{g_{Na} + g_K + g_{Cl}}$$

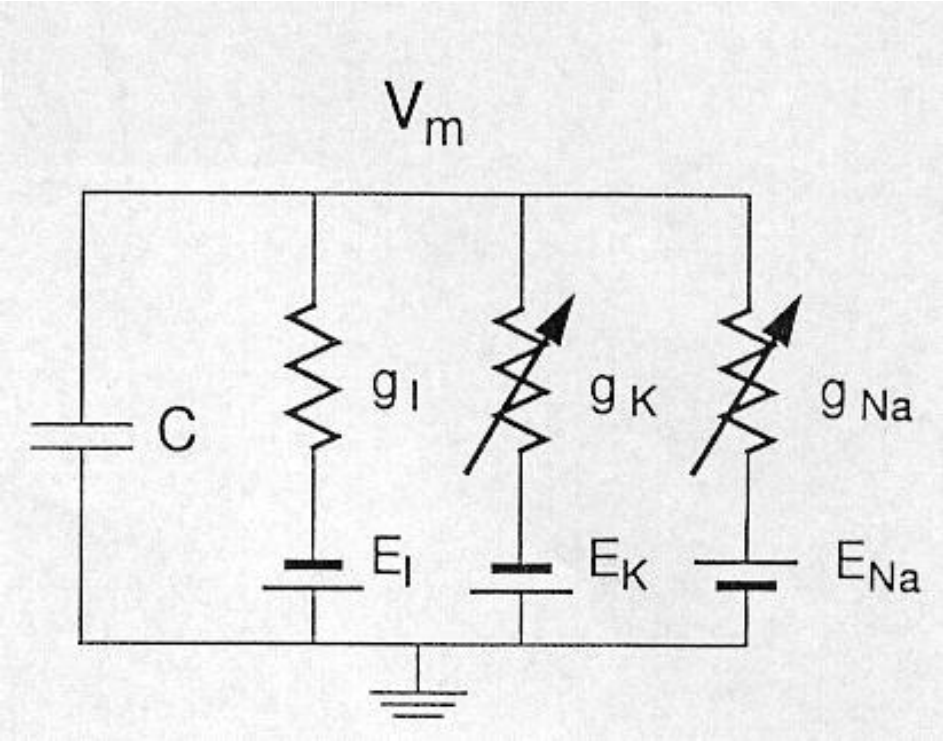


We see from equation that v(t) always “wants to” approach E.

Cell adjusts E simply by changing membrane conductance values.

# Sequence of E Changes

- When cell is at rest v=E is close to $E_{Cl}$.
- Early in an action potential, $Na^+$ channels open up, dramatically increasing $g_{Na}$. This brings E closer to $E_{Na}$, with v following.
- Later, $Na^+$ channels close while $K^+$ channels open. E comes close to $E_K$, at a more negative level than the resting potential.
- Finally, $K^+$ channels close, and v goes back to the resting voltage.

# The resulting pulse:

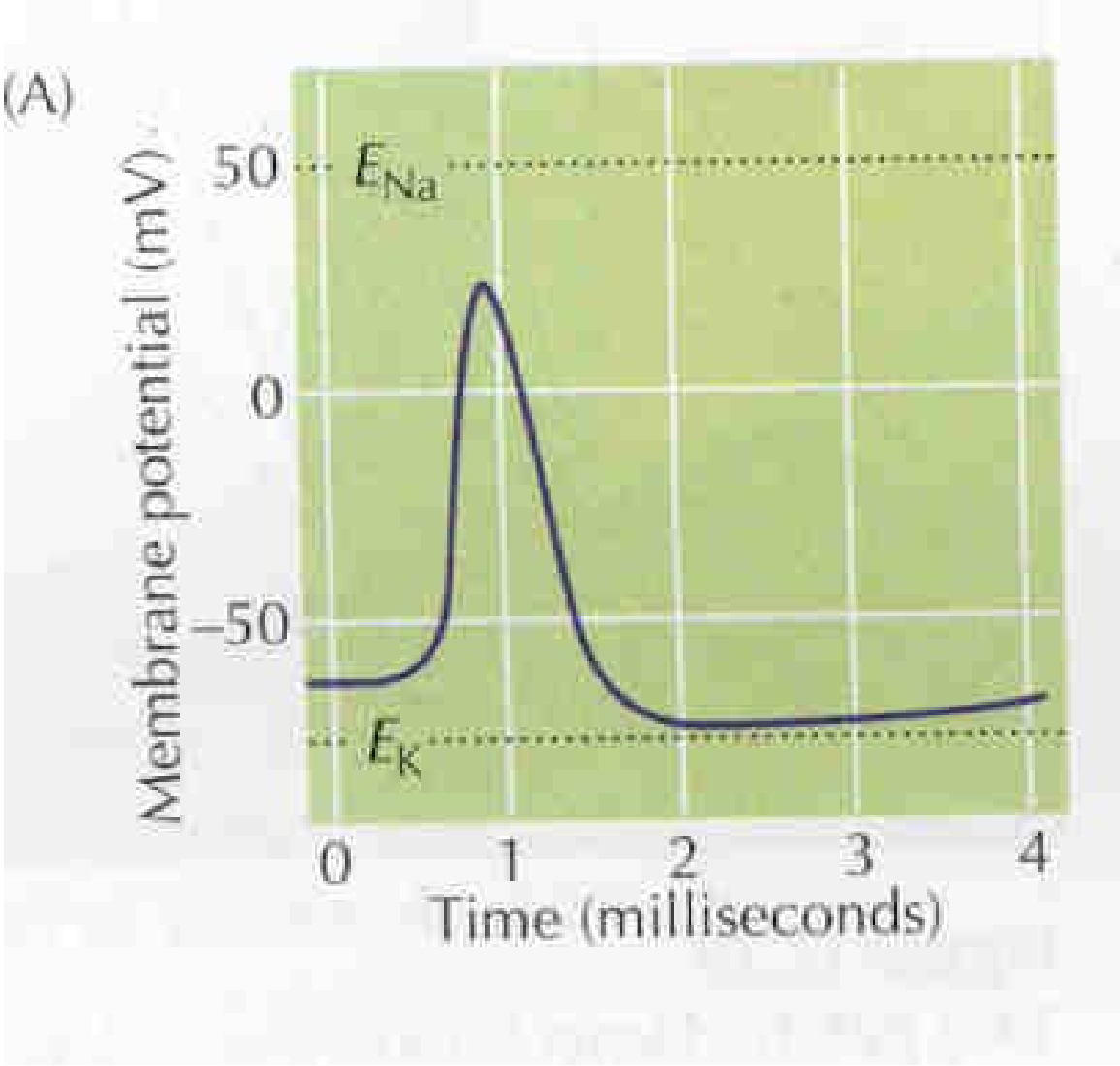

# Ion Conductance Change Via Controlled Opening and Closing of Ion Channels

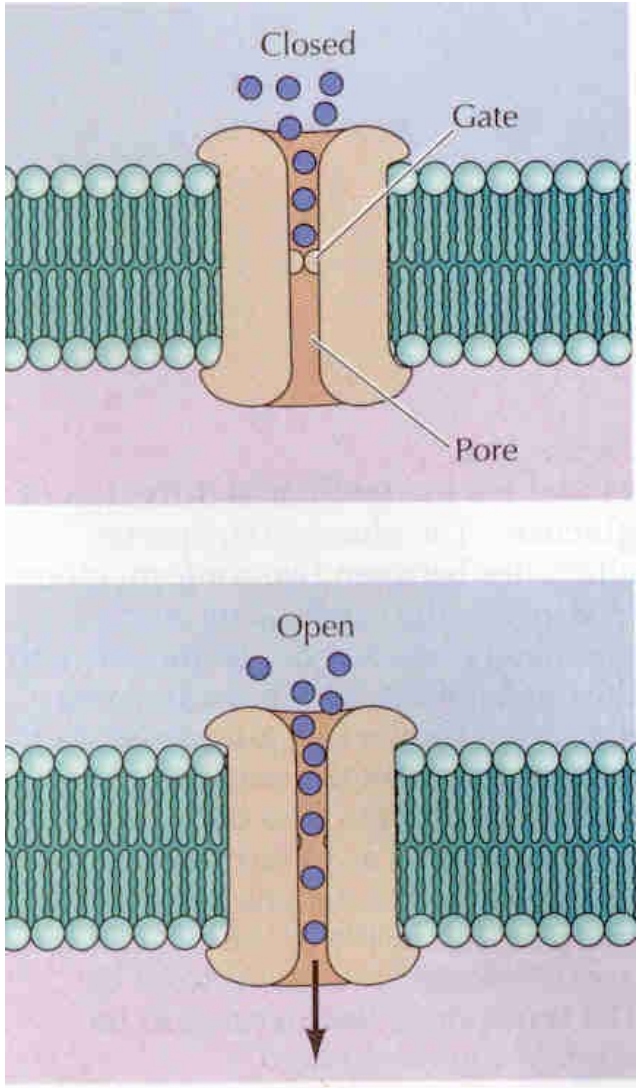


- Transport of ions through channels is extremely rapid. More than $10^6$ ions per second flow through open channels – flow rate which is thousands of times larger than for ions transport through carrier proteins.
- Ion channels are highly selective. Narrow pores restrict passage to ions of appropriate size and charge.

# More about Ion Channels

- Most ion channels are not permanently open. Some are though.
- Channel gates open in response to some stimuli.
- Ligand-gated channels open in response to the binding of neuro-transmitters or other signaling molecules.
- Voltage-gated channel open in response to changes in electric potential across the membrane.

# Phases 1 and 2

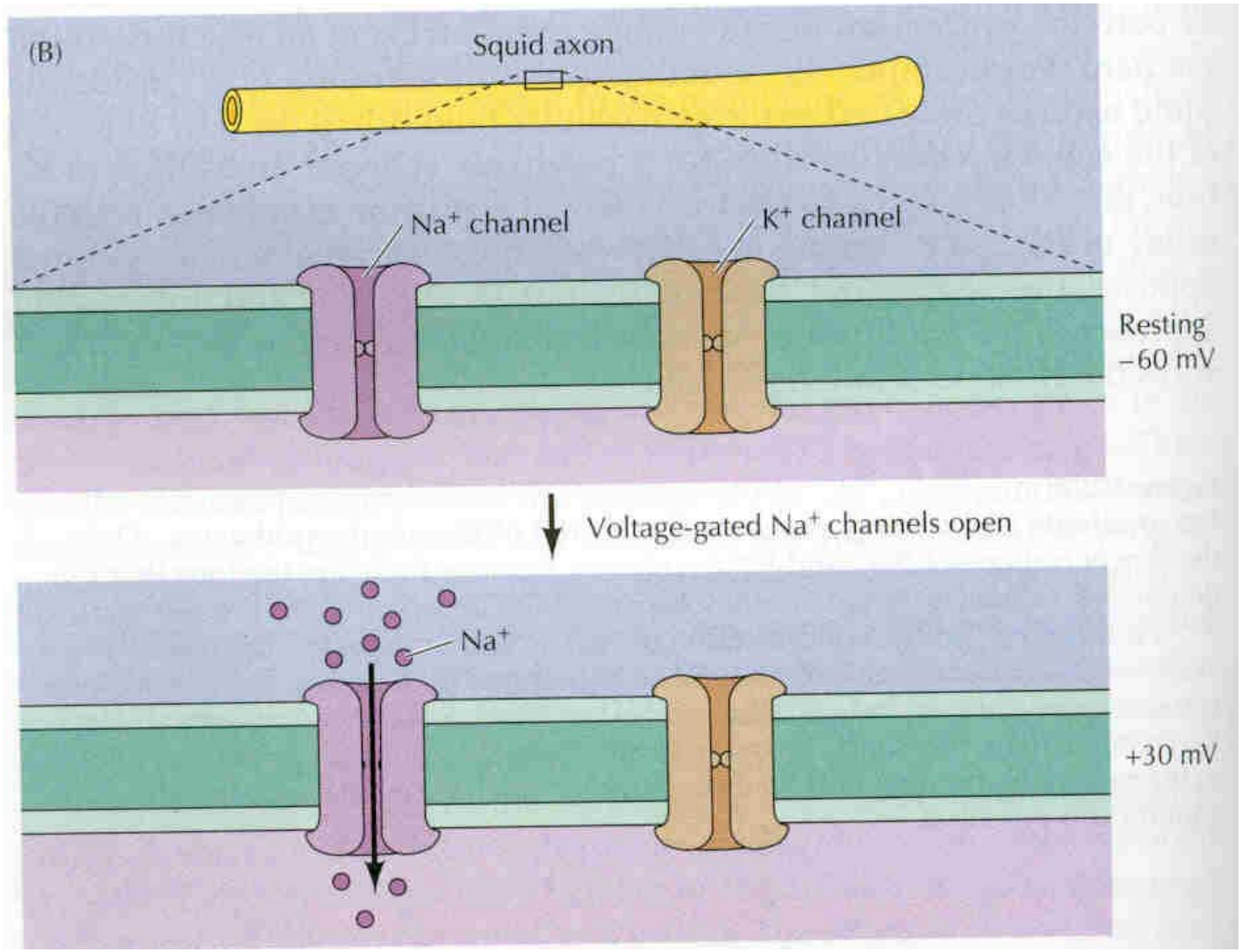

# Phases 2 and 3

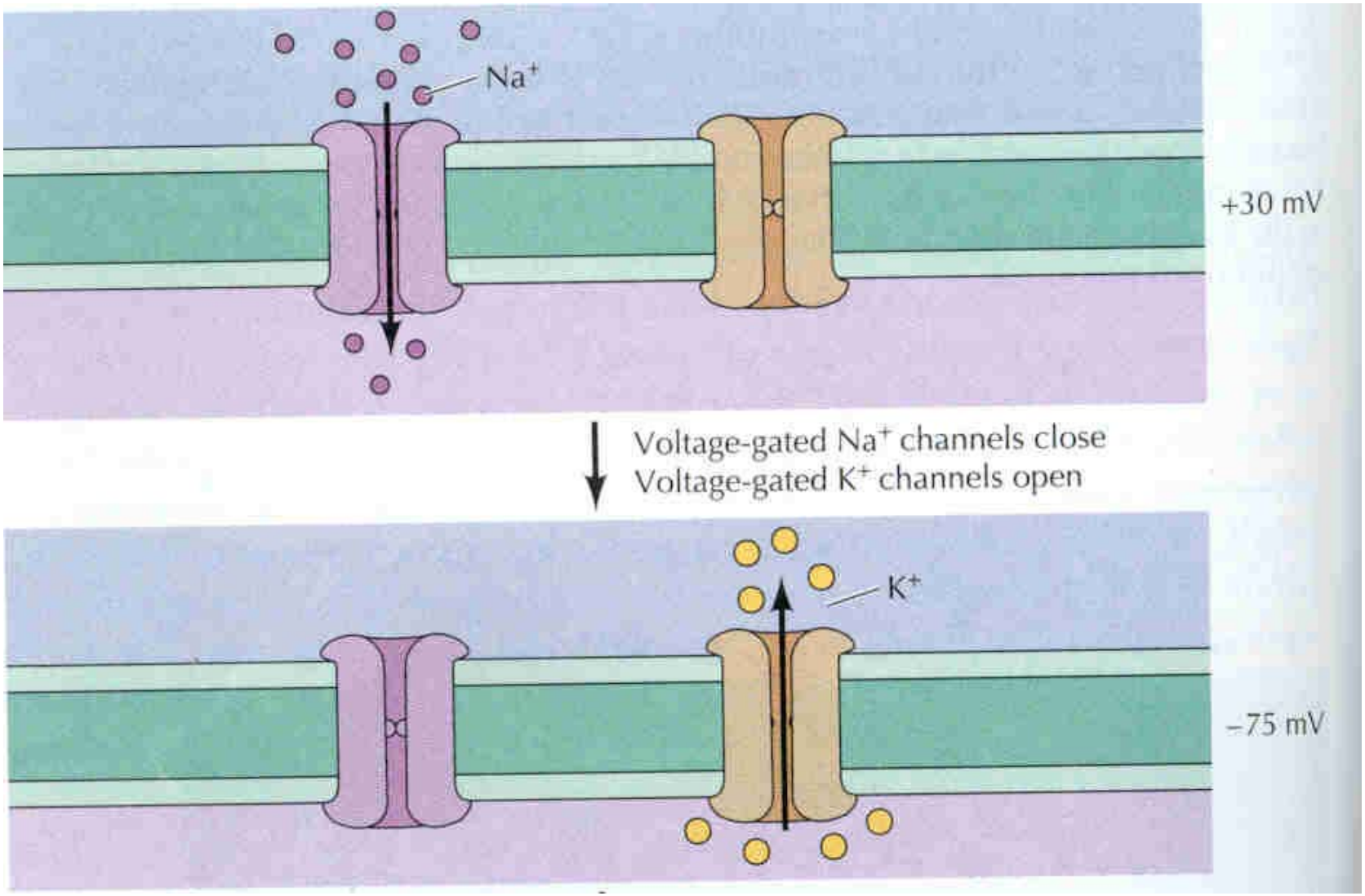

# Phases 3 and back to 1

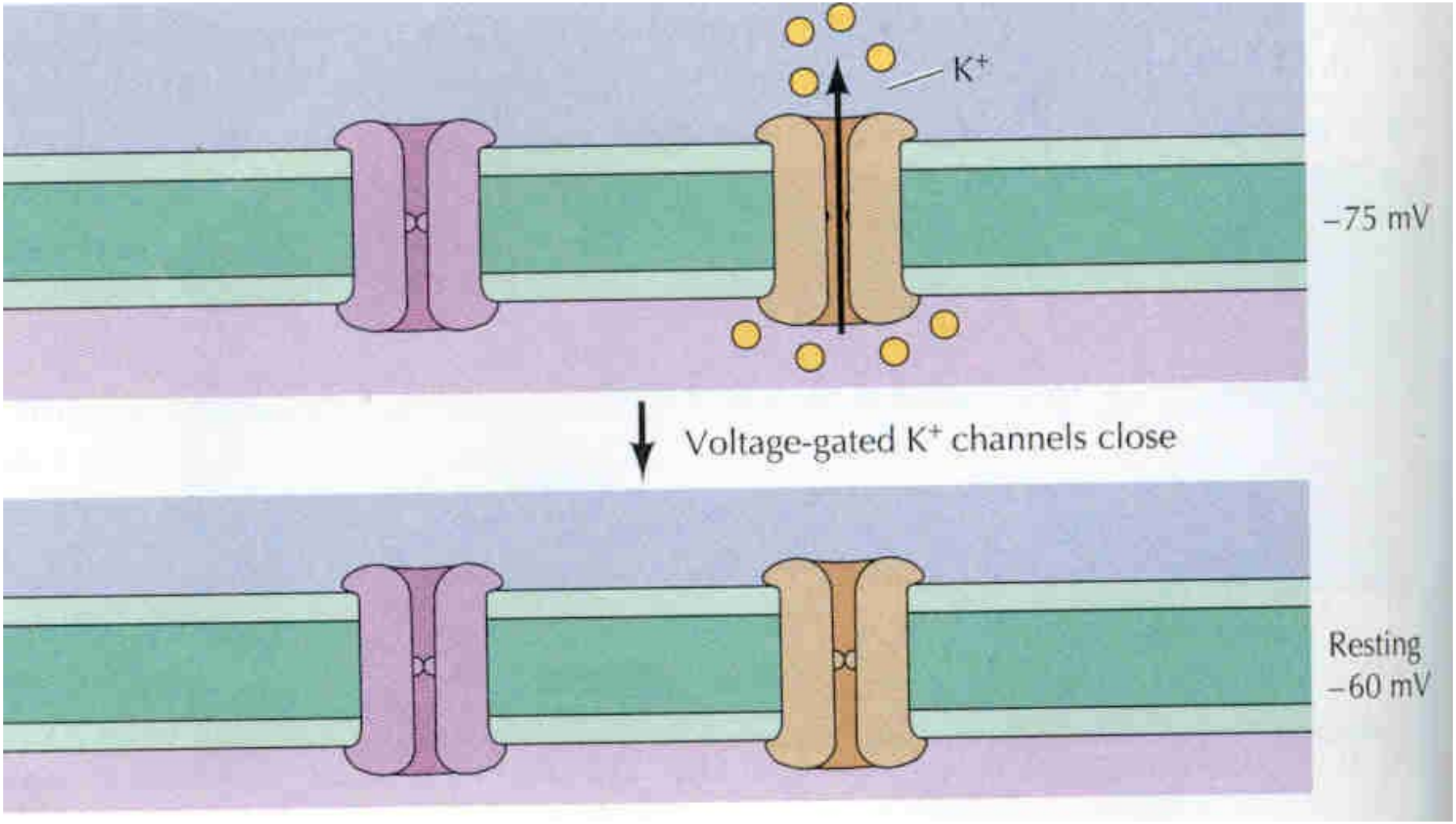

# Ion Selectivity of Sodium Channels - 1

- Narrow pore acts as a size filter.
- Ionic radius of $Na^+$ is smaller than that of $K^+$.

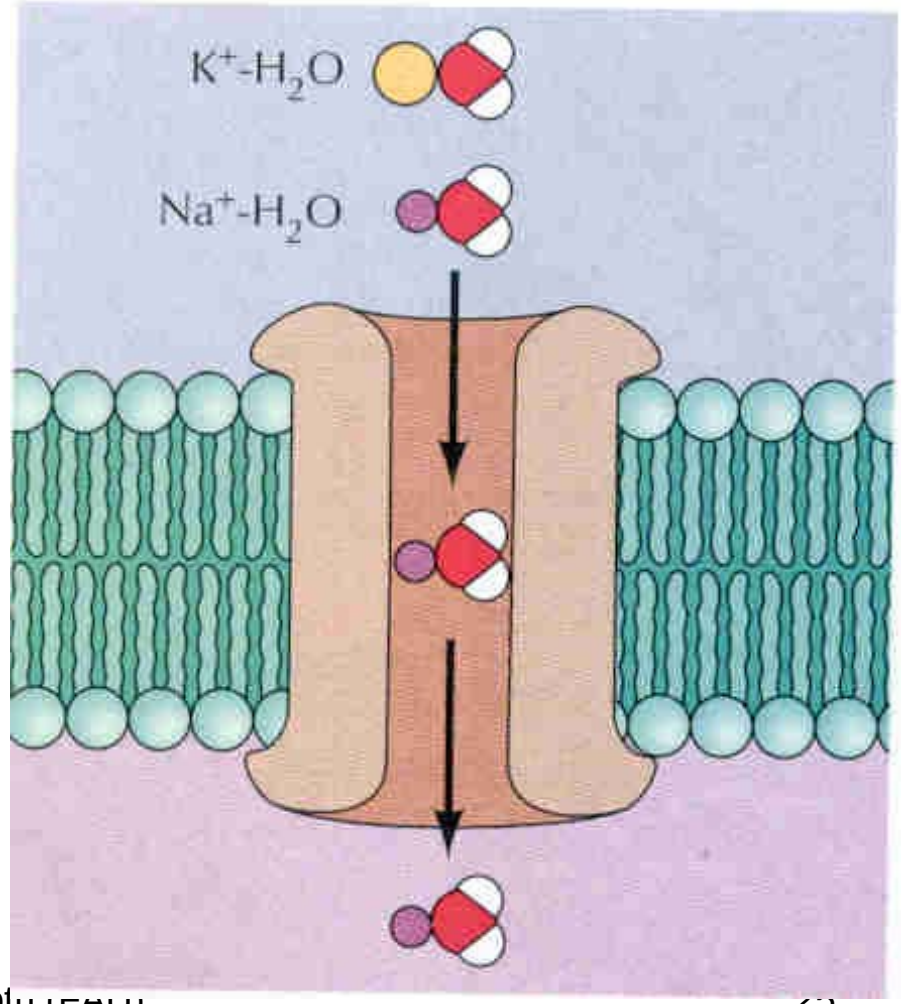

# Ion Selectivity of Sodium Channels - 2

- Narrow pore acts as a size filter.
- Ionic radius of $Na^+$ is smaller than that of $K^+$.
- But now the question is – how does a $K^+$ channel work??

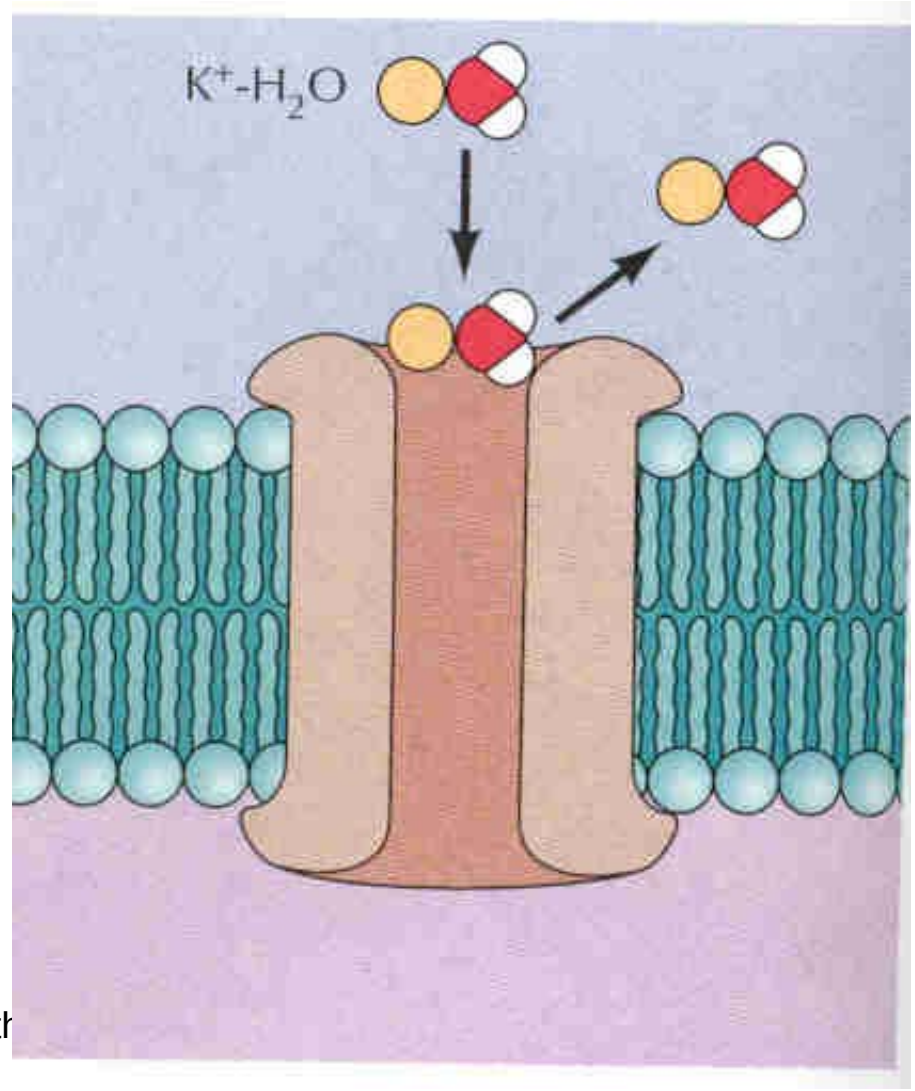

# Ion Selectivity of Potassium Channels - 1

- Here, the selectivity of the pore is thought to be related to interaction between $K^+$ and polar amino acid side chains lining the pore.

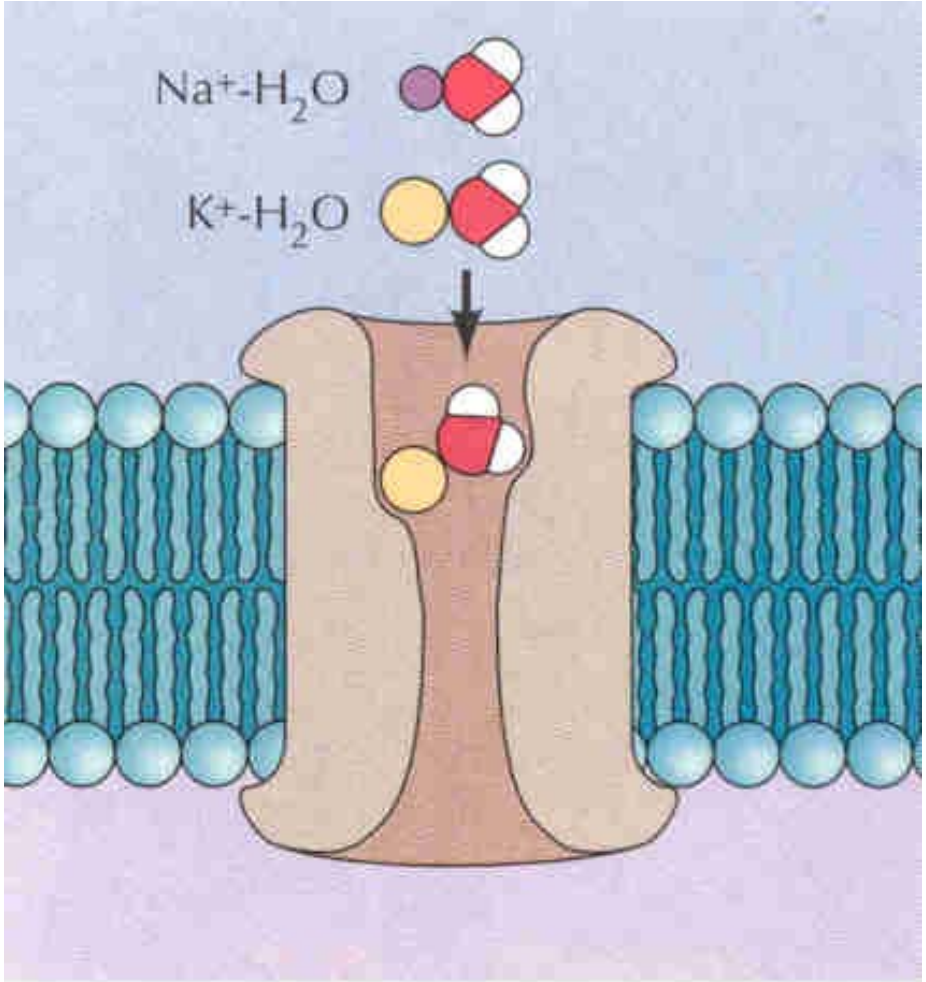

# Ion Selectivity of Potassium Channels - 2

- Here, the selectivity of the pore is thought to be related to interaction between $K^+$ and polar amino acid side chains lining the pore.
- Water molecule is displaced, and $K^+$ goes through.

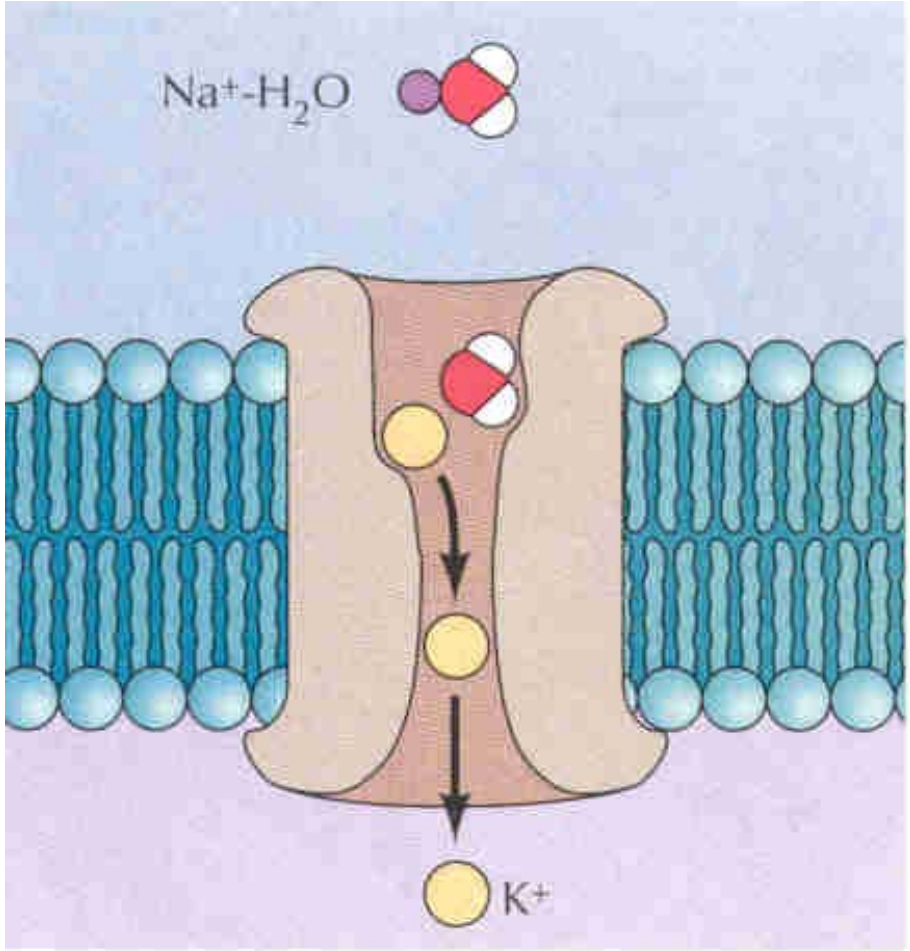

# Ion Selectivity of Potassium Channels - 3
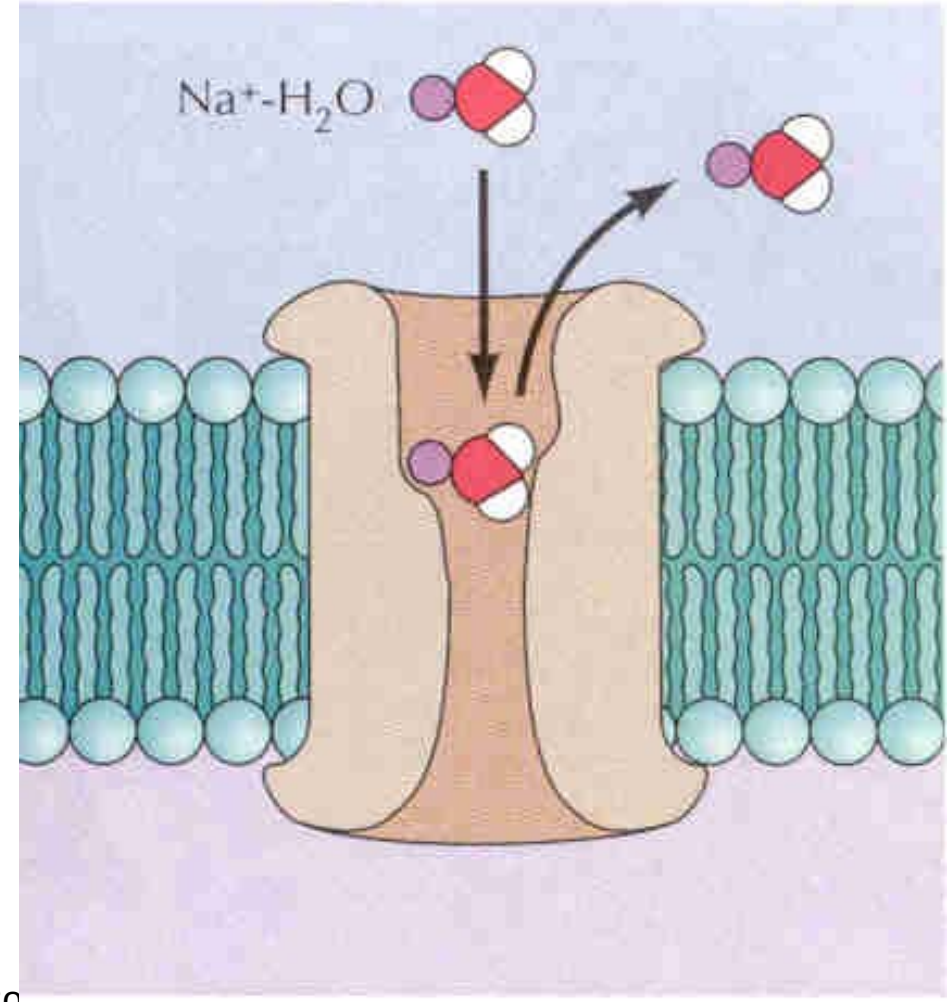
- In contrast, dehydrated $Na^+$ is too small to interact with the polar side chains.
- $Na^+$ remain bound to water molecules, and the complex is too large to pass through the pore.