BME 5742 Bio-Systems Modeling and Control

Lecture 15

Models for Spread of Infectious Diseases

Theory References

- Nicholas F. Britton, “Essential Mathematical Biology”, Springer 2003
- Edward K. Yeargers et al, “An Introduction to the Mathematics of Biology”, Birkhauser 1996.

Simple SI Epidemic Model Assumptions

- Population consists only of <u>susceptibles</u> and <u>infected</u>.
- A few infected species are assumed to be introduced into a population of susceptibles.
- Disease is contagious. It is spread by contact between susceptibles and infected.

SI Model Assumption (cont'd)

- A susceptible, once infected, becomes infective immediately and remains so indefinitely.
- $S \rightarrow I$ (a reasonable assumption to the initial stage of many diseases).
- Assume that the population is fixed N:

  $S(t)+I(t)=N$ (That is, no deaths. Model is valid over a short enough time).

SI Model Equations

$$\frac{dS}{dt} = -\beta IS \qquad \frac{dI}{dt} = \beta IS$$

- The parameter β is called the <u>pairwise infectious contact rate</u>.
- We assumed that contact model is proportional to the product of the populations.

Equation for the Infected population

$$S + I = N \qquad \frac{dI}{dt} = \beta IS \Rightarrow$$

$$\Rightarrow \frac{dI}{dt} = \beta I(N - I) = (\beta N) I (1 - \frac{I}{N})$$

- Infected model is the familiar Logistic Model, with a=βN and K=N.
- According to this model, everyone eventually becomes infected: I→N.
- So far, no “recovery” was included in the model.

SIS Model: S→I→S

- Recovered individuals again become susceptible. In such a case, we say that disease remains <u>endemic</u> in the population.
- Most micro-parasitic infections leave behind some measure of immunity. However, some bacterial infections (like TB, meningitis etc) confer little or no immunity → SIS model may be reasonable in such cases.
- Again, assume S+I=N

SIS Simple Model Equations

$$\frac{dS}{dt} = -\beta IS + \gamma I \qquad \frac{dI}{dt} = \beta IS - \gamma I$$

- The parameter β is the <u>pairwise infectious contact rate</u> as before.
- The constant γ is the <u>recovery rate</u>.
- It looks like a version of a Predator-Prey model, but there are constraints!

Standard Normalizing of the SIS Model Equations

$$\frac{dS}{dt} = -\beta IS + \gamma I \qquad \frac{dI}{dt} = \beta IS - \gamma I$$

$$u = \frac{S}{N} \qquad v = \frac{I}{N} \qquad \tau = \gamma \cdot t$$

Resulting Normalized SIS Model Equations

$$\frac{du}{d\tau} = -(R_0 u - 1)v \qquad \frac{dv}{d\tau} = (R_0 u - 1)v$$

$$u = \frac{S}{N} \qquad v = \frac{I}{N} \qquad \tau = \gamma \cdot t \qquad R_0 = \frac{\beta N}{\gamma}$$

$$u + v = 1 \qquad 0 \le u \le 1 \qquad 0 \le v \le 1$$

- R_0 is called the <u>reproductive ratio</u> .
- Recall: βN= rate at which a single infective is introduced into a population of size N. (1/γ)= expected duration that an infective remains contagious.

Disease dies out if R_0<1:

$$\frac{dv}{d\tau} = (R_0 u - 1)v = (R_0(1-v) - 1)v$$

$$R_0 = \frac{\beta N}{\gamma} \qquad u + v = 1$$

$$\frac{dv}{d\tau} = (R_0 - 1)(1 - \frac{v}{(\frac{R_0 - 1}{R_0})})v$$

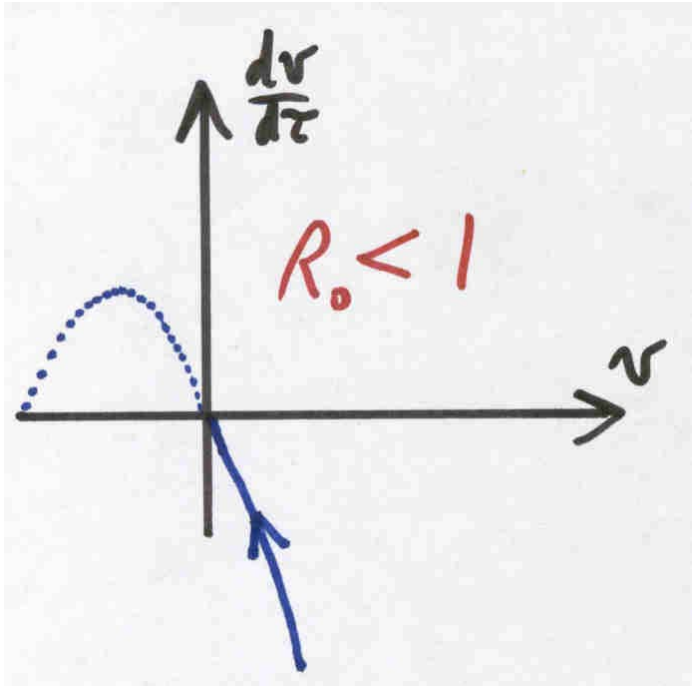

Disease stays endemic if R_0>1:

$$\frac{dv}{d\tau} = (R_0 u - 1)v = (R_0(1-v) - 1)v$$

$$R_0 = \frac{\beta N}{\gamma} \qquad u + v = 1$$

$$\frac{dv}{d\tau} = (R_0 - 1)(1 - \frac{v}{(\frac{R_0 - 1}{R_0})})v$$

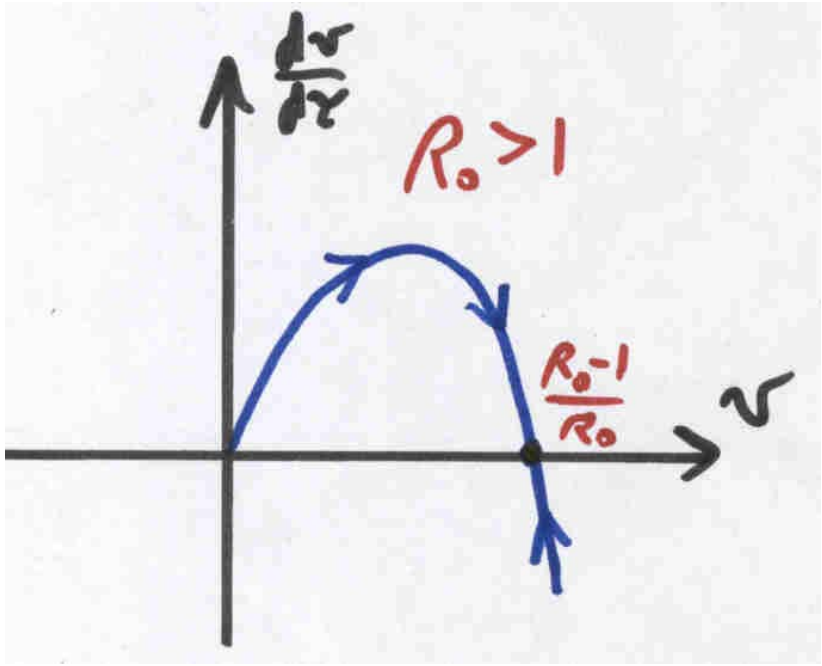

SIR Epidemics

- SIR = Susceptibles + Infected + Recovered.
- Infected individuals may recover. Recovered species leave the Infected group, presumably without coming back.
- The Recovered play no further role in the spread of the disease.
- S→I→R (Kermack & McKendrick, 1927)

SIR Epidemics Model Assumptions

- Duration of the epidemic is short compared to the lifetime of its hosts.
- Therefore, we can neglect birth and disease-unrelated (and related) deaths.
- Thus: $N=S(t)+I(t)+R(t)$
- As in SIS model, we shall use the βIS Susceptibles / Infected interaction, and a γI, which this time describes $I \rightarrow R$.

Simple SIR Model Equations

$$\frac{dS}{dt} = -\beta IS \qquad \frac{dI}{dt} = \beta IS - \gamma I \qquad \frac{dR}{dt} = \gamma I$$

- Is system <u>third-order</u>?
- No, due to the constraint N=S+I+R

"Formal" Normalizing of the SIR Model Equations

$$\frac{dS}{dt} = -\beta IS \qquad \frac{dI}{dt} = \beta IS - \gamma I \qquad \frac{dR}{dt} = \gamma I$$

$$u = \frac{S}{N} \qquad v = \frac{I}{N} \qquad w = \frac{R}{N} \qquad \tau = \gamma t$$

Equations become:

$$\frac{du}{d\tau} = -R_0 uv \qquad \frac{dv}{d\tau} = (R_0 u - 1)v \qquad \frac{dw}{d\tau} = v$$

$$R_0 = \frac{\beta N}{\gamma} \qquad u + v + w = 1 \qquad 0 \le u, v, w \le 1$$

Actual Normalized SIR Model

$$\frac{du}{d\tau} = -R_0 uv \qquad \frac{dv}{d\tau} = (R_0 u - 1)v$$

$$R_0 = \frac{\beta N}{\gamma} \qquad u + v + w = 1$$

$$0 \le u \le u_0 \qquad 0 \le v \le 1 - w \qquad 0 \le w \le 1$$

- S(t) (represented by u) can never exceed S(0). It can only decrease.
- Similarly, R(t) (represented by w) cannot decrease.
- Let $u_0+v_0=1$ and $w_0=0$.

Equilibria of SIR Model

$$\frac{du}{d\tau} = 0 = -R_0 uv \qquad \frac{dv}{d\tau} = 0 = (R_0 u - 1)v$$

$$R_0 = \frac{\beta N}{\gamma} \qquad u + v + w = 1$$

$$0 \le u \le u_0 \qquad 0 \le v \le 1 - w \qquad 0 \le w \le 1$$

- There are infinitely many equilibrium points, with v_e=0 and u_e=const. No other equilibria.
- Reaching an equilibrium means that “Infected” population disappeared: Disease eradicated.
- Does model reach equilibrium? Is point stable?

What is trajectory's direction at (u_0,v_0)?

$$\frac{du}{d\tau} = -R_0 uv \qquad \frac{dv}{d\tau} = (R_0 u - 1)v$$

$$R_0 = \frac{\beta N}{\gamma} \qquad u + v + w = 1$$

$$0 \le u \le u_0 \qquad 0 \le v \le 1 - w \qquad 0 \le w \le 1$$

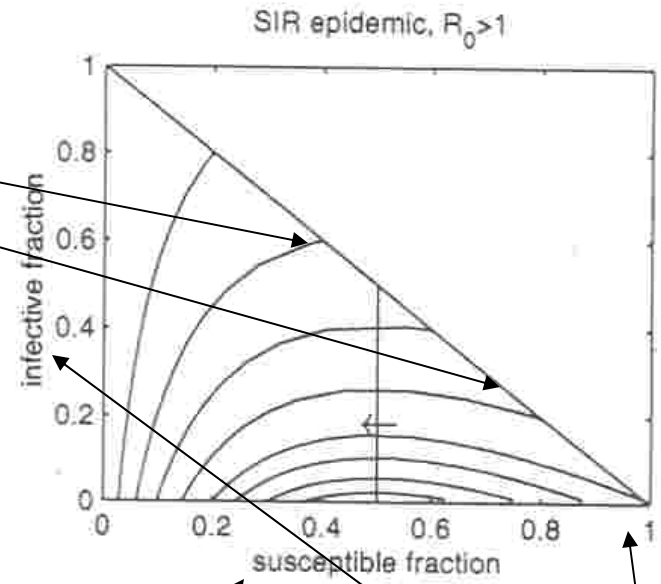

Arrow must point to the left, as u must decrease. If $R_0u_0>1$ then arrow points up (v starts to increase), and if $R_0u_0<1$ then arrow points down (v starts to decreases).

[From Britton's book]

If R_0<1: Disease dies out

$$\frac{dv}{du} = \frac{1}{R_0 u} - 1$$

$$R_0 = \frac{\beta N}{\gamma}$$

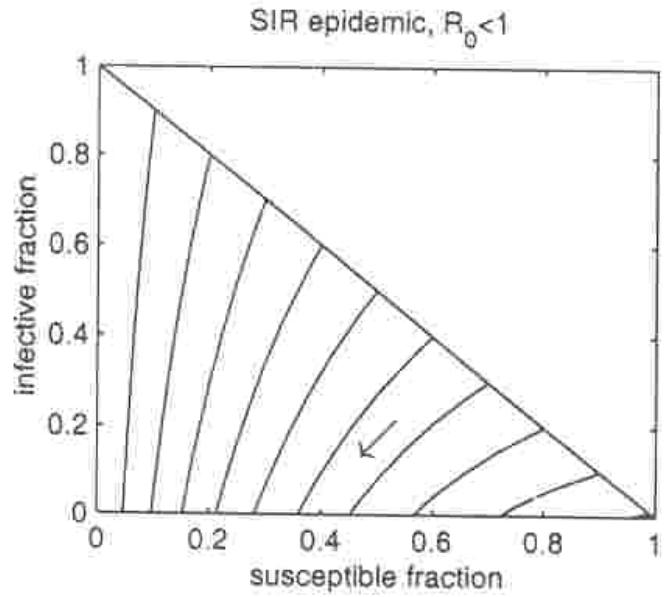

From Britton's book

If R_0<1 then dv/du>0, and because (du)<0 then (dv)<0 always. In other words, I population always decreases, if infection rate is lower than recovery rate.

If R_0>1: Disease spreads and lingers longer

$$\frac{dv}{du} = \frac{1}{R_0 u} - 1$$

$$R_0 = \frac{\beta N}{\gamma}$$

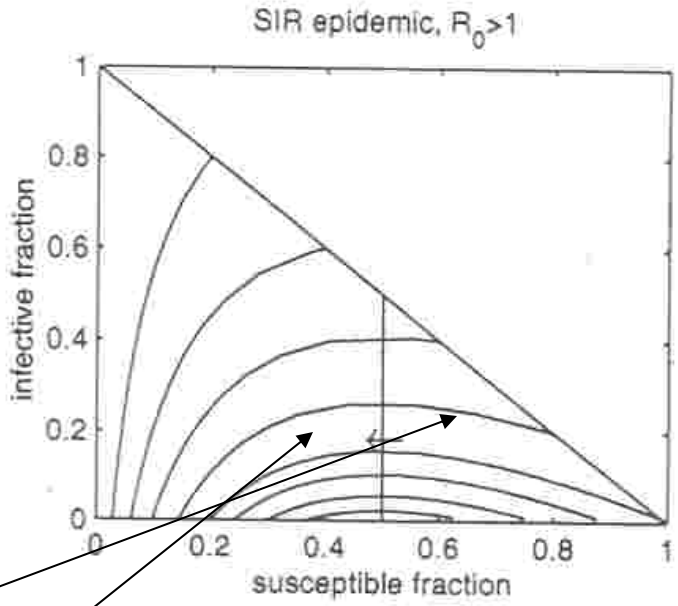

If R_0 >1 then dv/du<0, and because (du)<0 then (dv)>0 initially, till u falls below $1/R_0$. Then v begins to decrease.

SIR Model Follow Ups

- One can now introduce more complications to the basic SIR model:
- Disease-related deaths,
- Time delay between infection and death,
- Time delay between being infected and being infective.
- Immunization effects.

Integrators only for S and I. R(t) is found algebraically from S(t) and I(t).

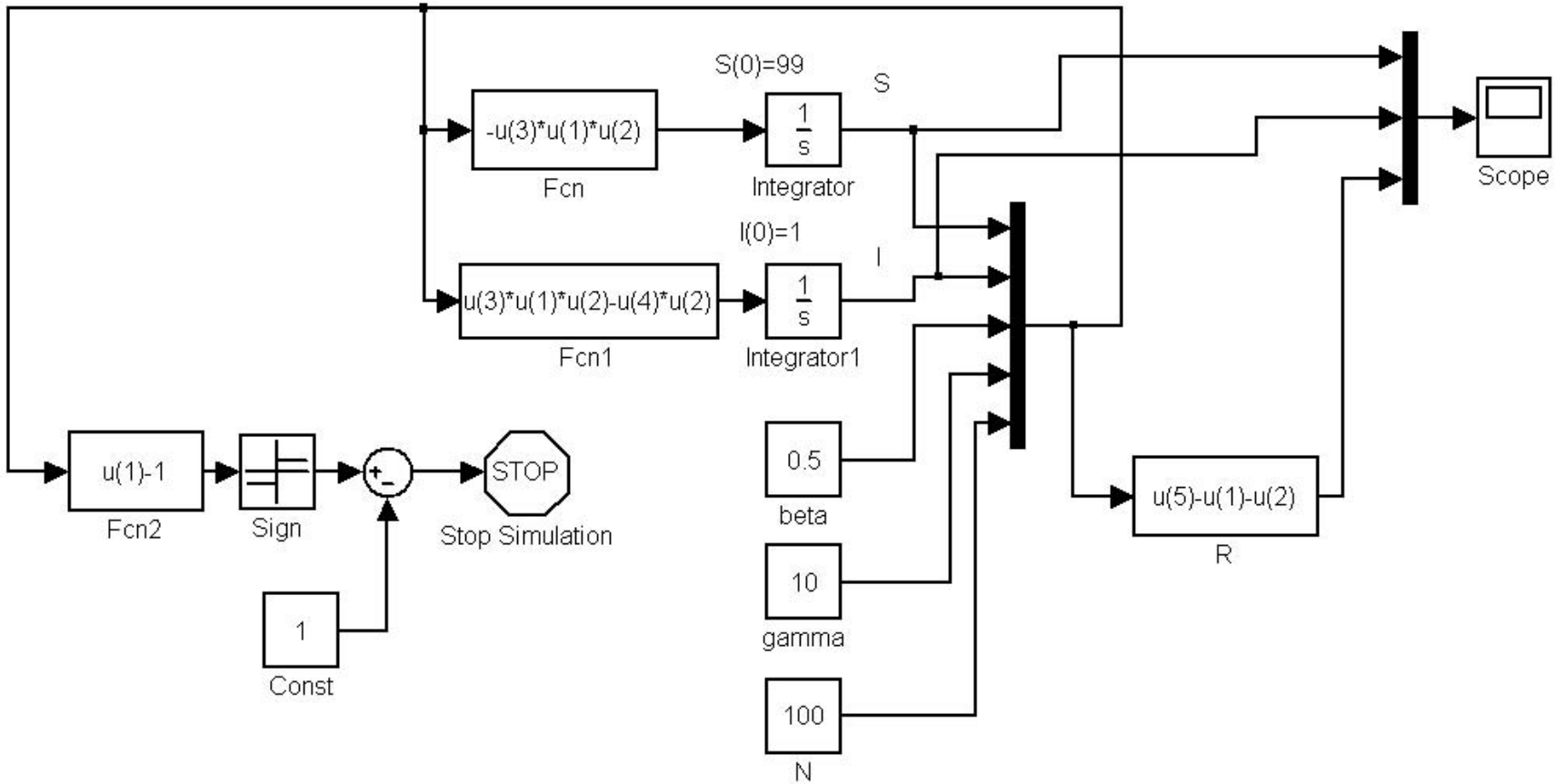

A STOP block is picked up from the Sinks folder. If its input signal becomes nonzero the whole simulation stops.

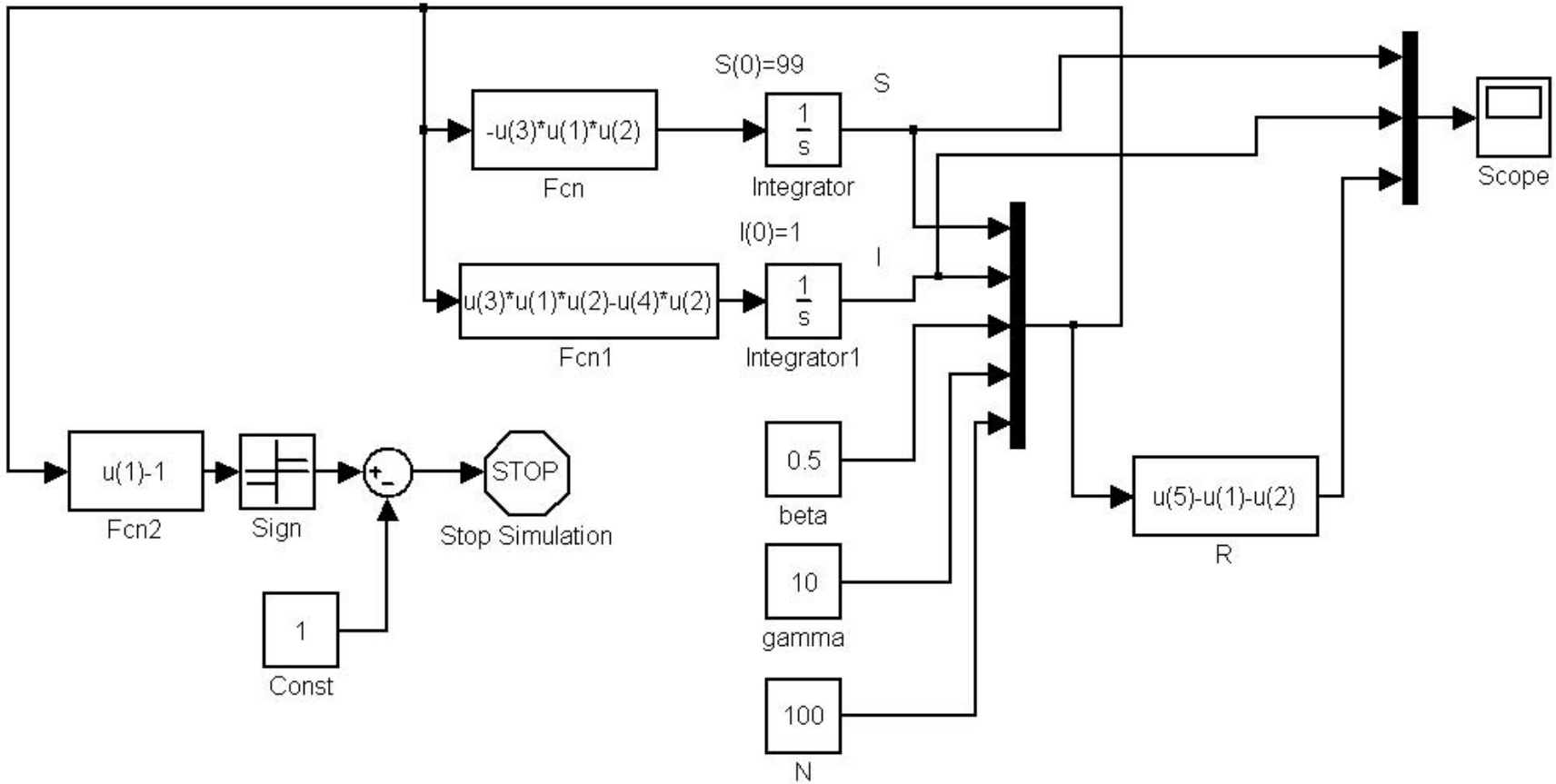

A Sign block has output +1 if its input is positive, -1 if input is negative and 0 if input is 0

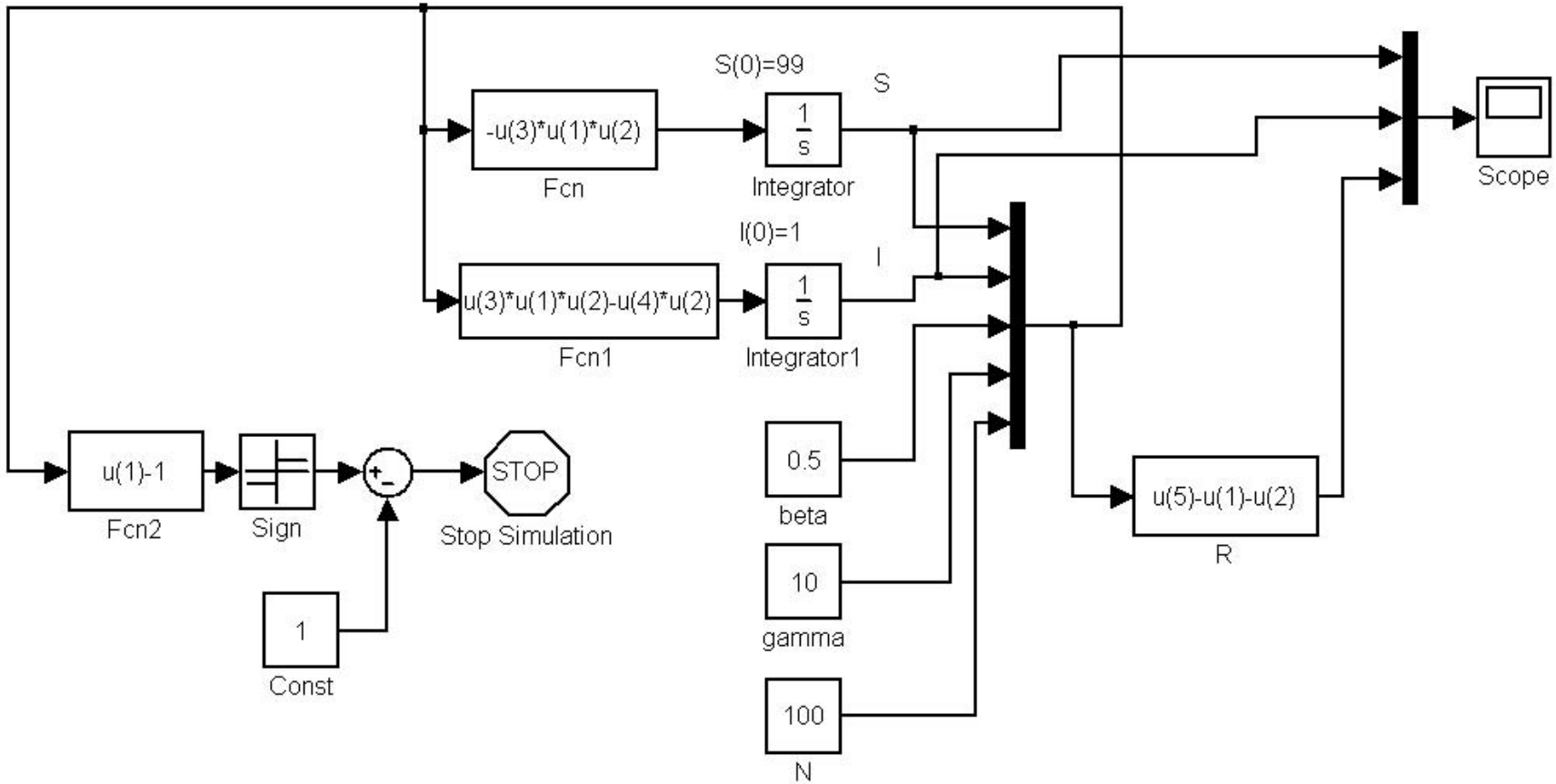

We want to stop the simulation when S(t) < 1. Note that when S(t)>1 the Sign block output is 1, and STOP block input is zero. When S(t)<1, the input to STOP is -2.

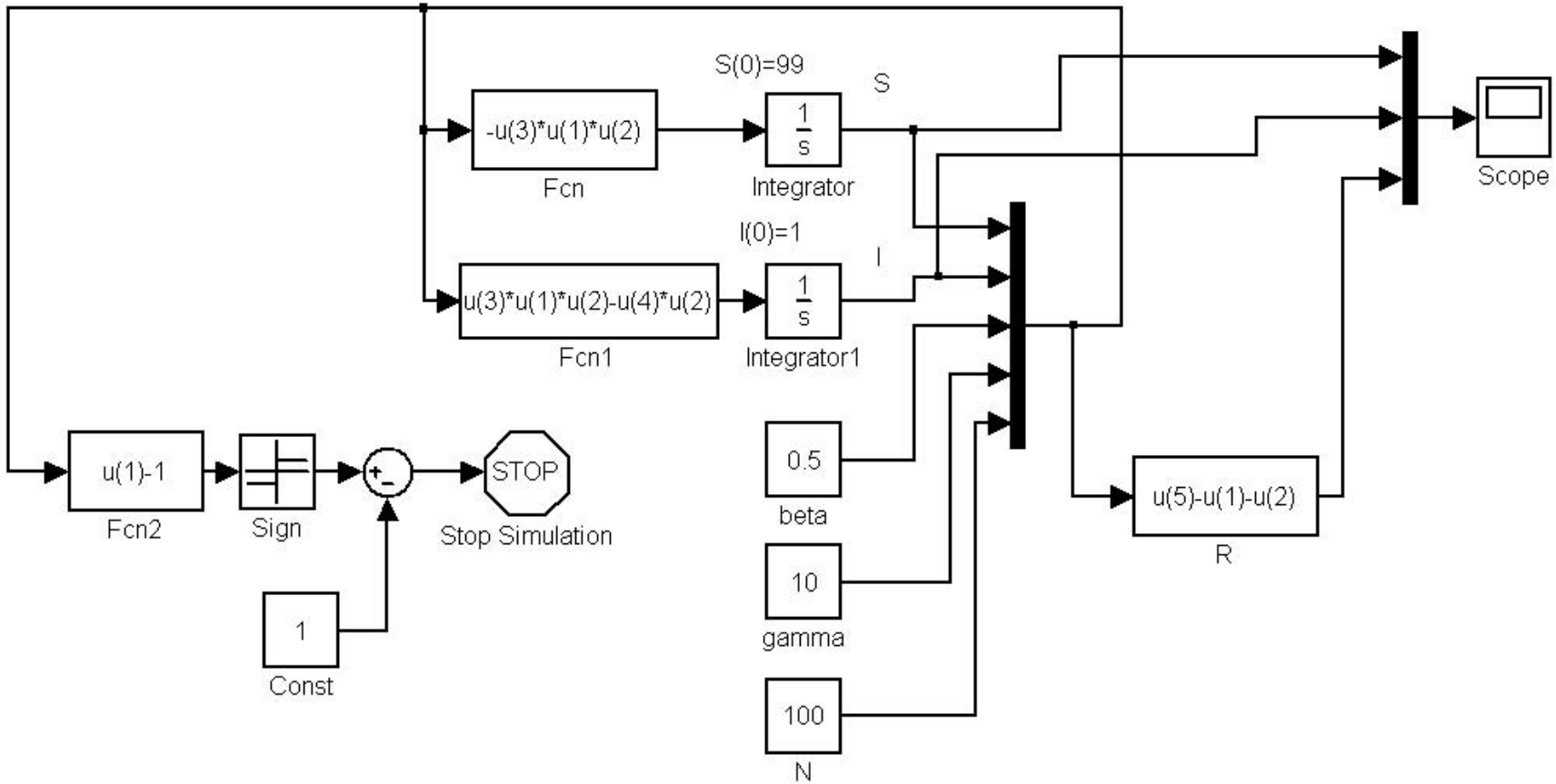

Comment about inserting STOP blocks

- There is a need to add another STOP block arrangement to stop the simulation when I(t) < 1.
- If we allow the simulation to continue despite the fact that some of the variable values no longer make sense the results that are produced (about the number of Recovered, or the time at which the disease becomes defeated) may be in error.

SIRD Model: Some of the Infected become Recovered and some may die. When simulation stops the total number of Dead shows up in the Display

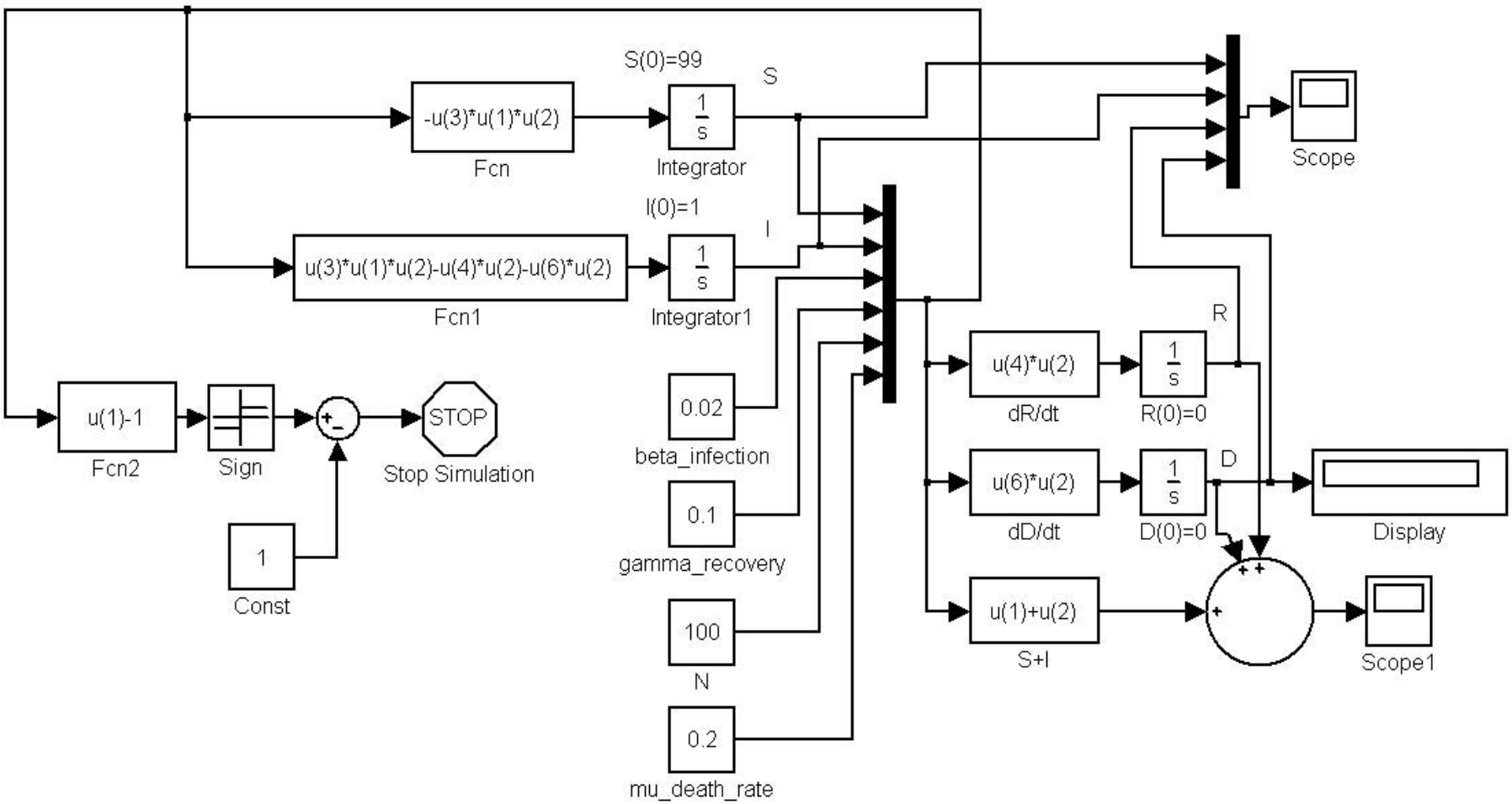

One of the four variables (S, I, R, D) should be treated as redundant. For instance, we can replace the integrator for R by Fcn block that computes N-S-I-D

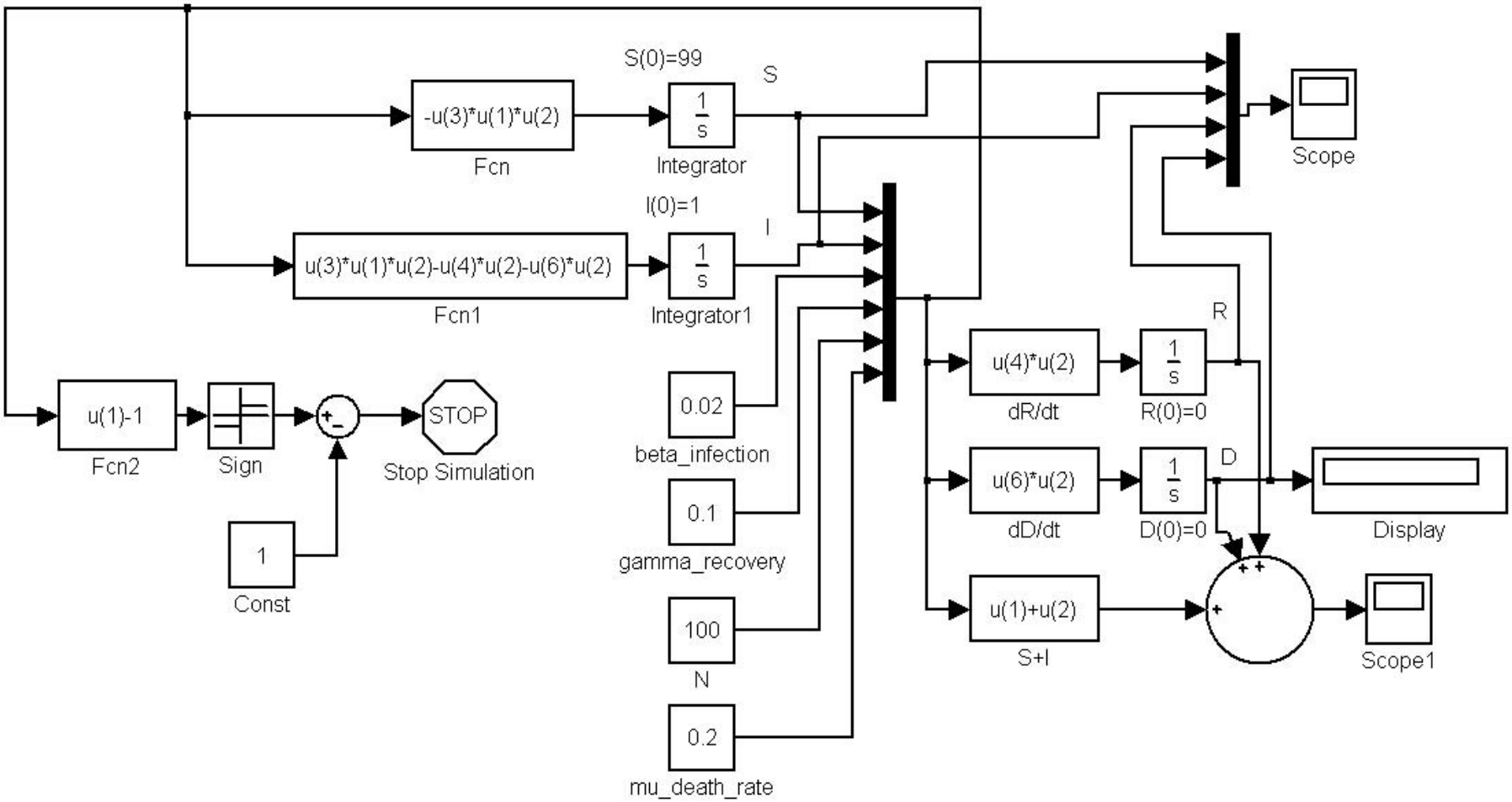

The diagram below is still correct, but only because R(0)=0. The summation and scope on the lower right hand side checks consistency – do all the variables add up to N?

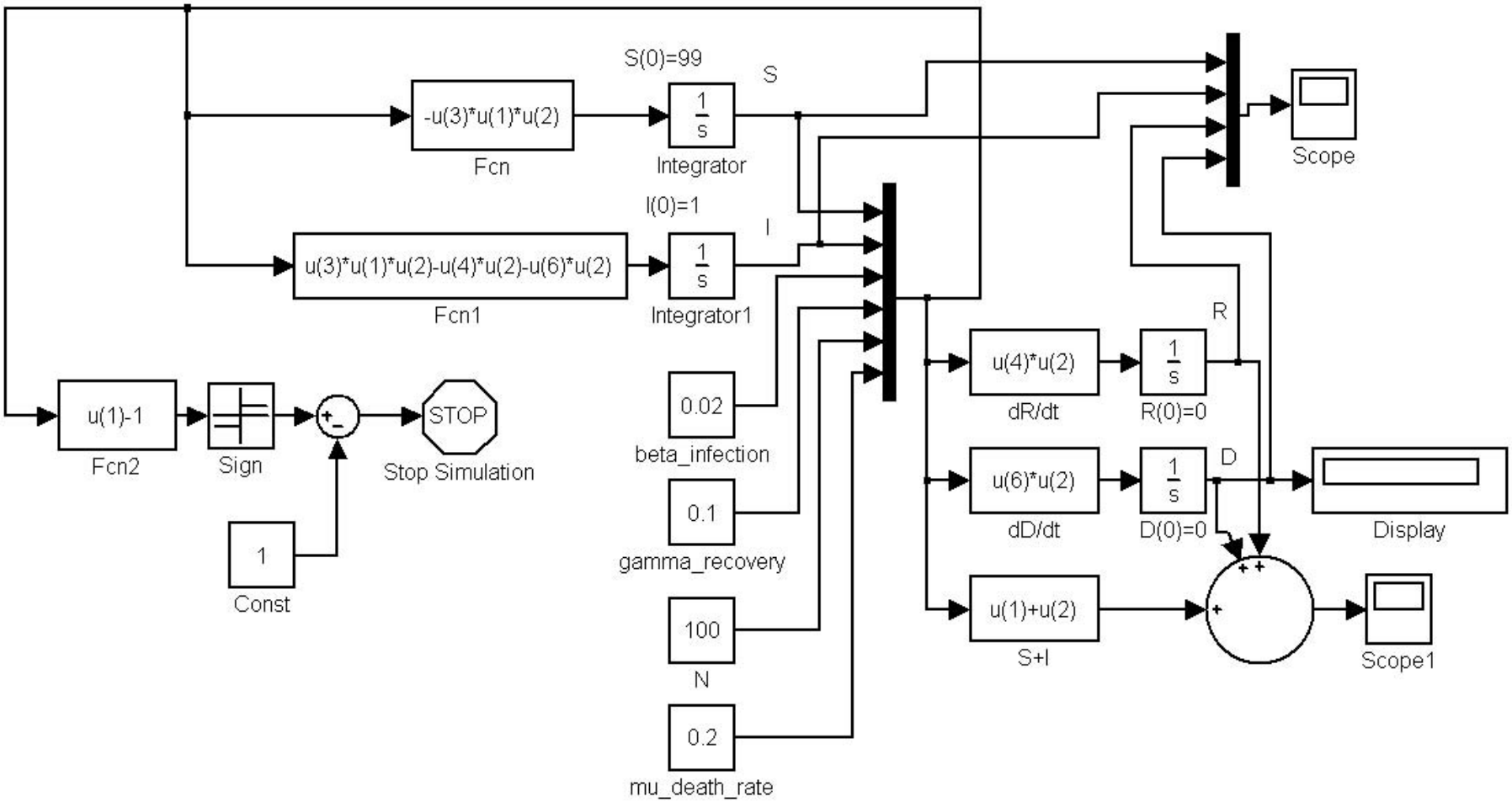

In this SIRD model we created two versions of I: Regular I(t) and a Delayed I(t-T). Both are available for the various Fcn blocks

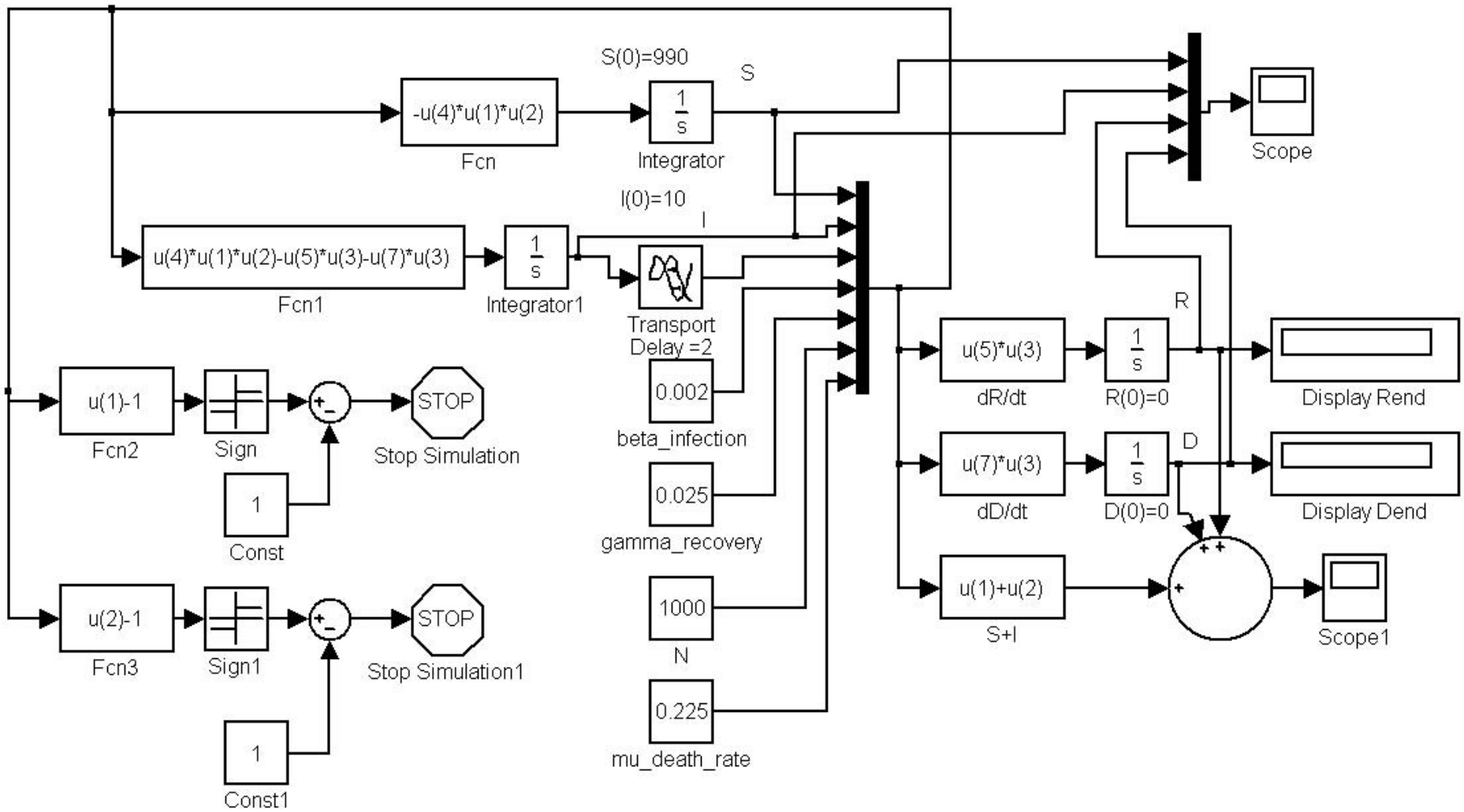

In the simulation below note that u(3) (the delayed I) was used for the recovered and dead terms, but a regular I is used for the infection term

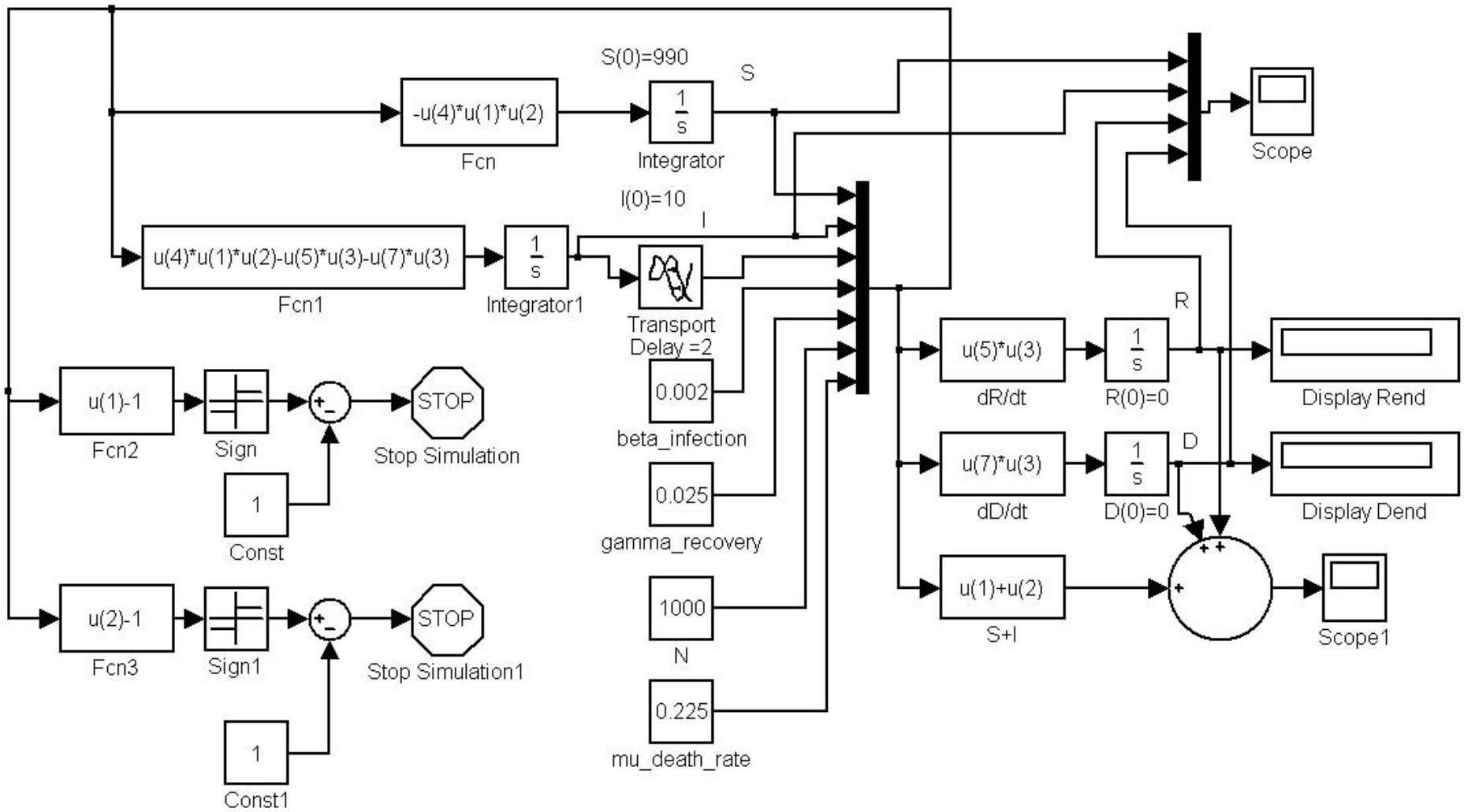

In the Transport Delay block we may assign the delay parameter internally (as done here), or externally using a CONST block.

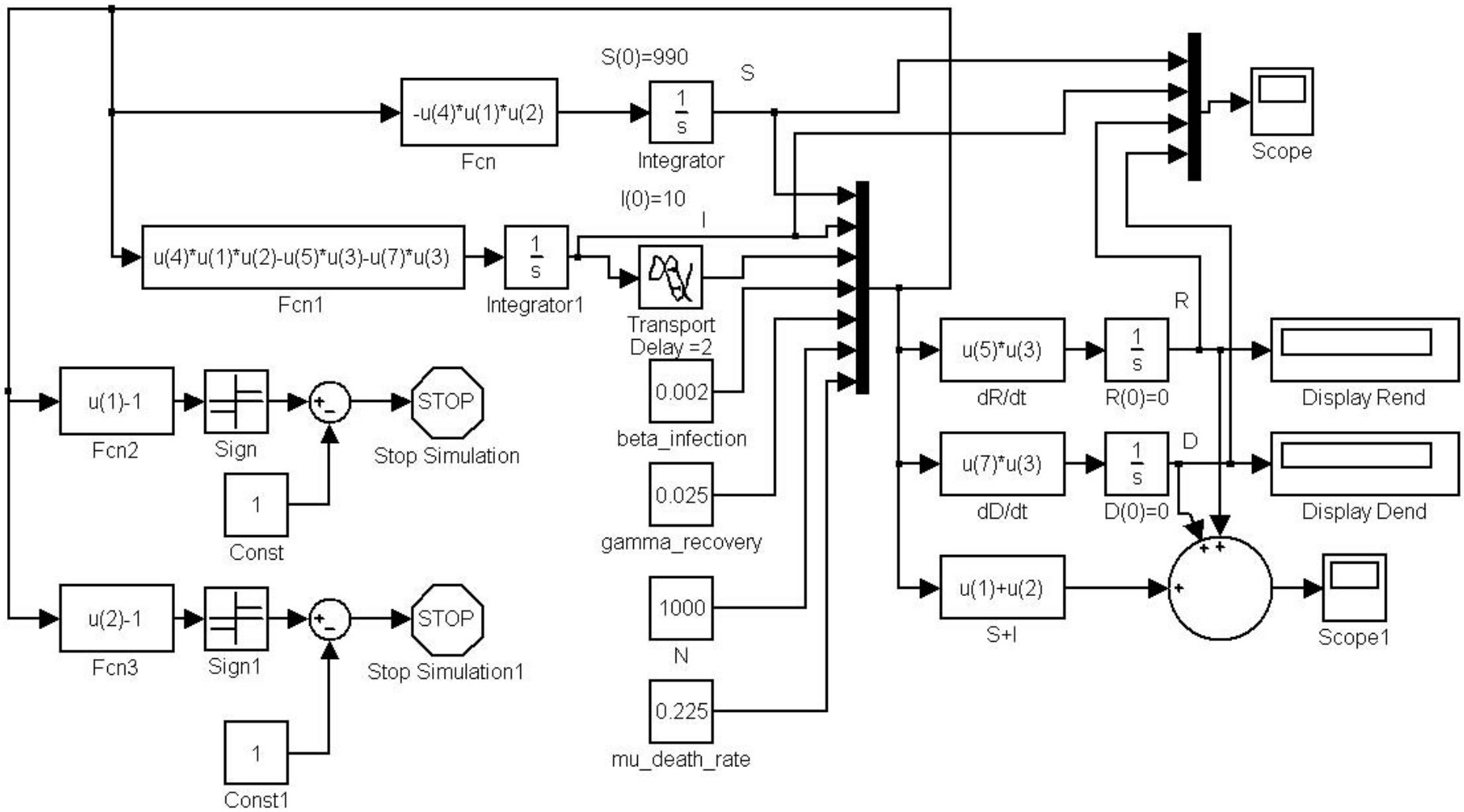

Pulse Generator is added to allow implementation of simple Immunization Strategies

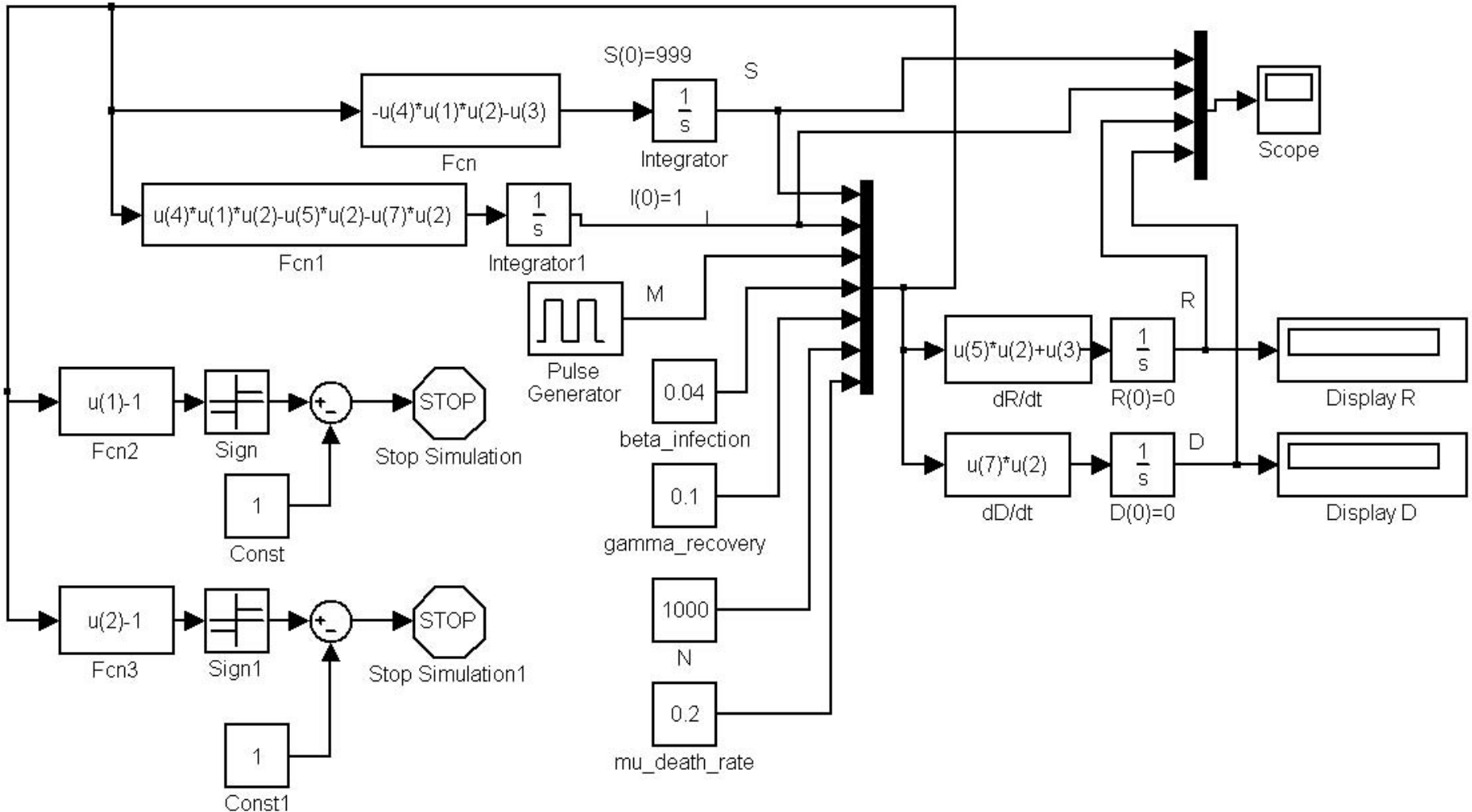

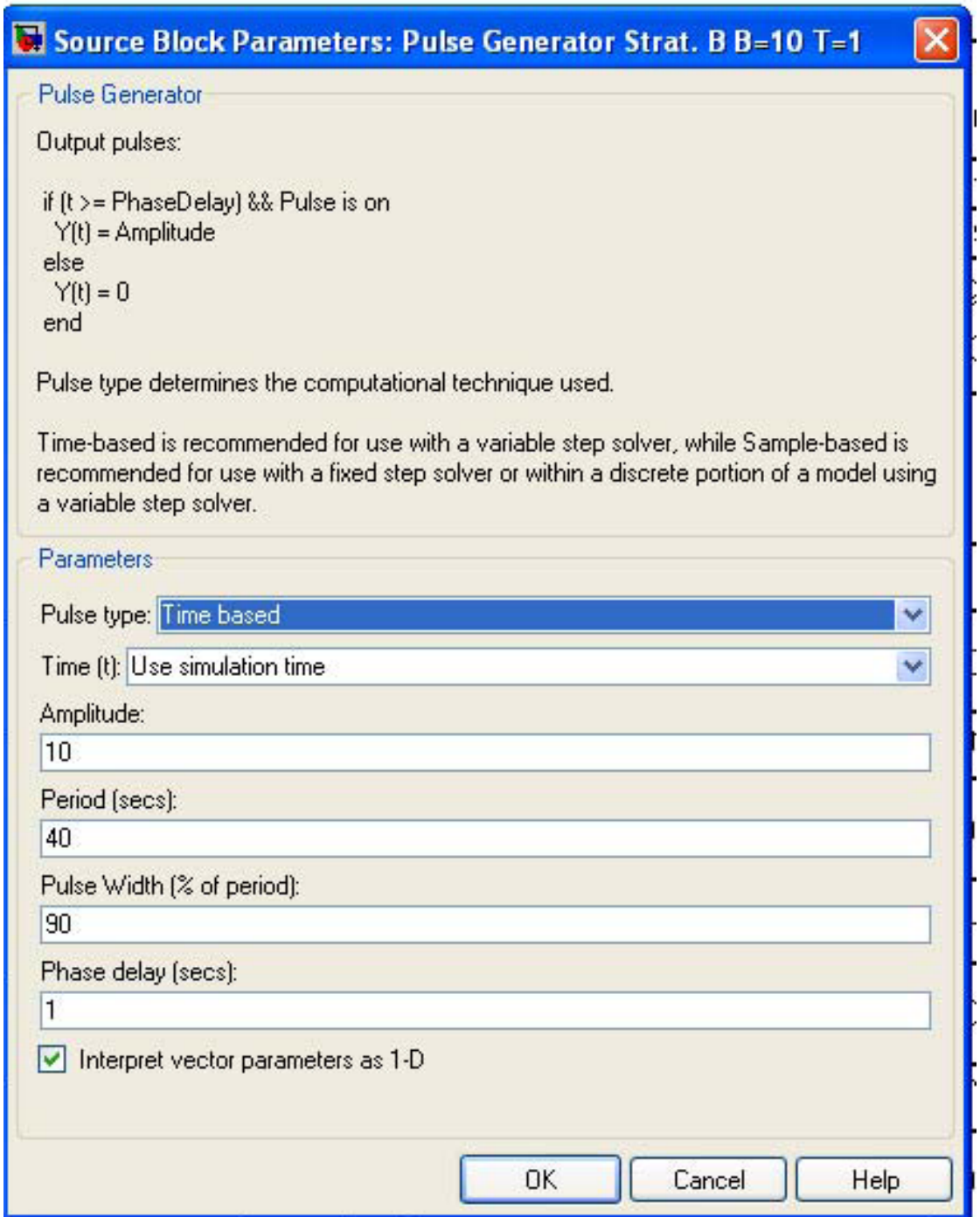

- How to use the Pulse generator to implement immunization?
- 1 second = 1 time unit in the simulated system (say 1 day)
- Phase delay = when we start the immunization

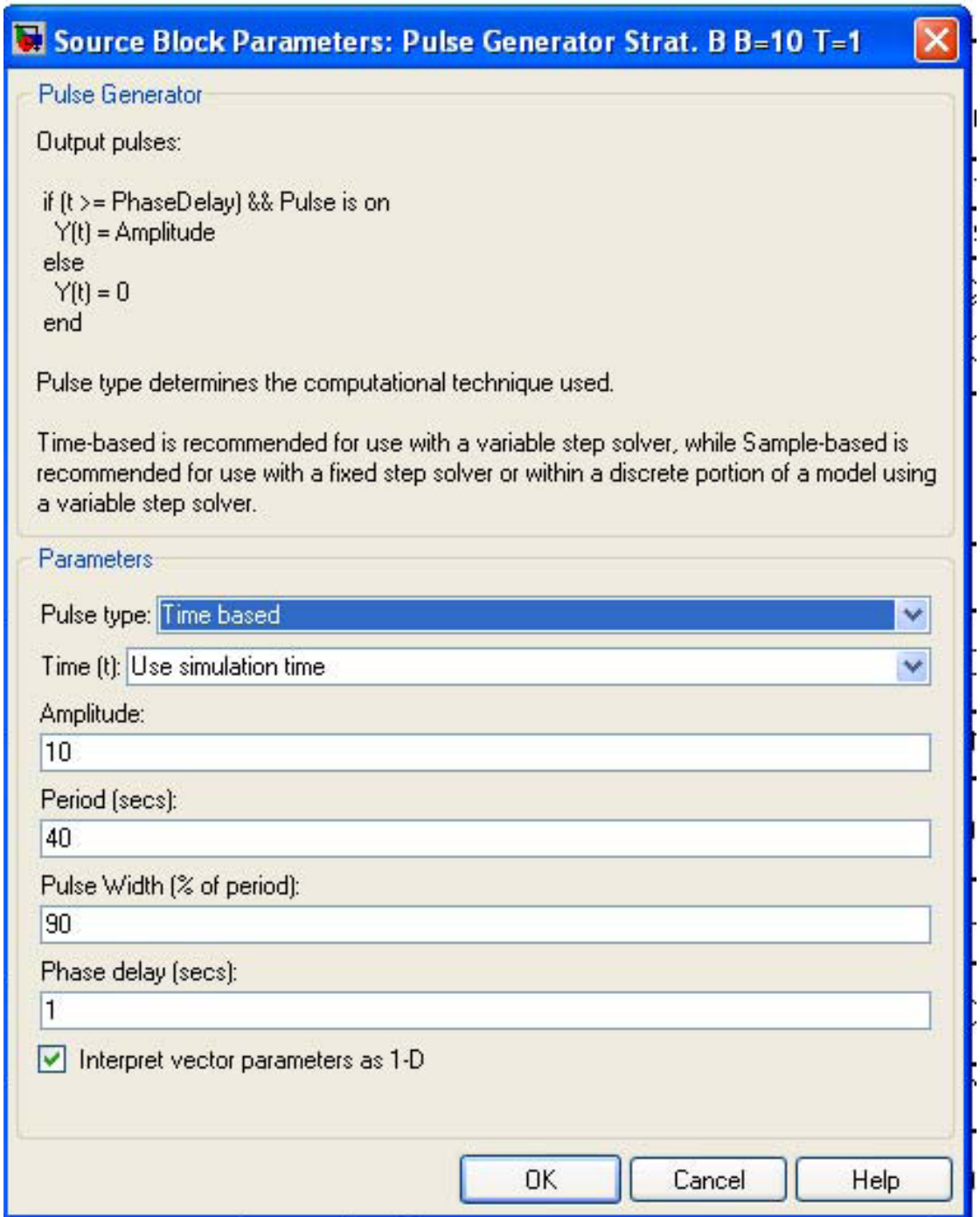

- How to use the Pulse generator to implement immunization?
- If we choose a large period (the one shown is larger than the simulation final time) → Step function
- It makes more sense to immunize periodically

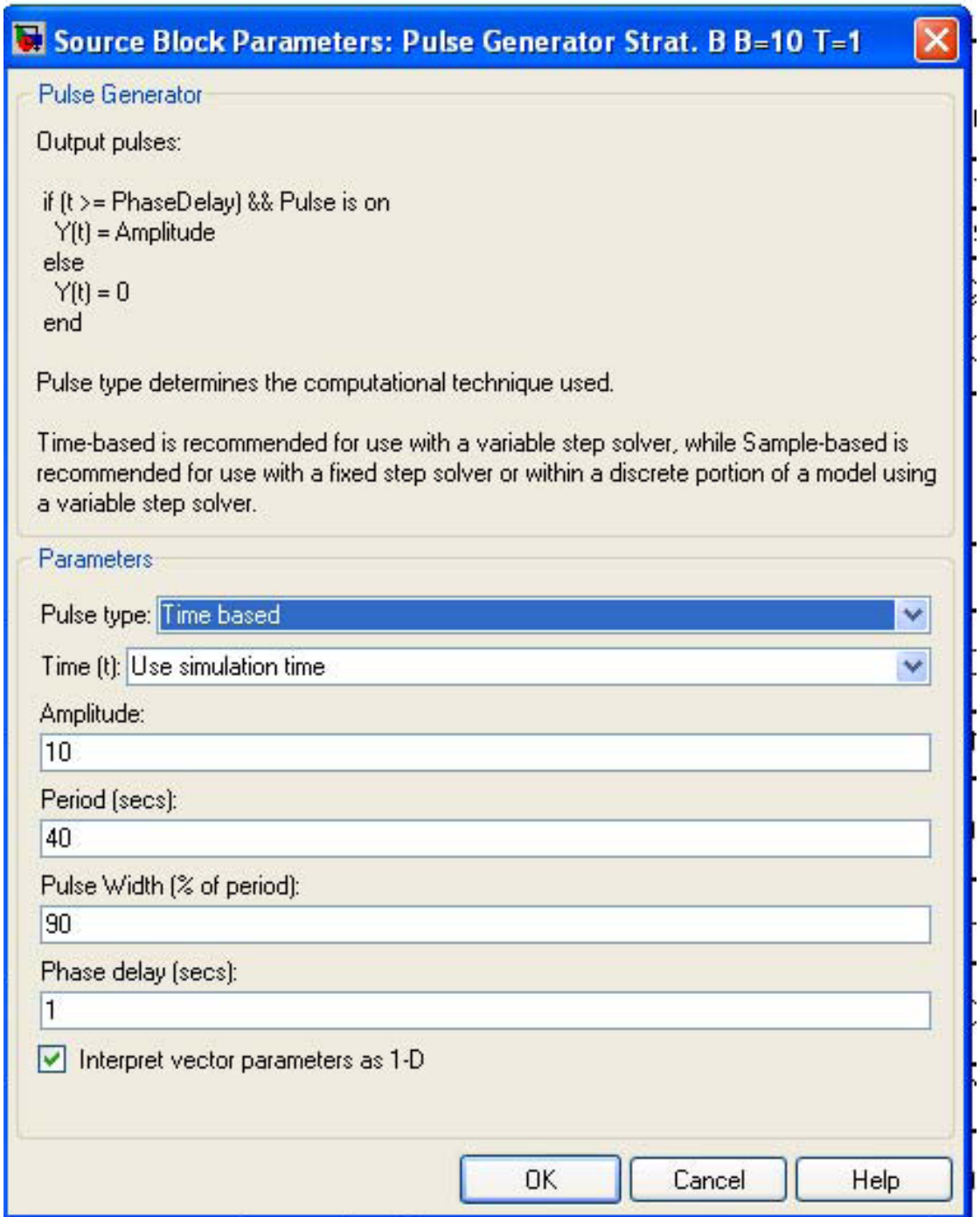

- How to use the Pulse generator to implement immunization?
- Say that we start after 3 days and we immunize 10 people per day:
- Amplitude = 10
- Period = 1
- Pulse Width = 50%
- Phase Delay = 3