BME 5742 Bio-Systems Modeling and Control

Lecture 4

Simulink Tutorial 1: Simulation of the Malthusian and Logistic Models

Model Set Up, Scope Set Up

Getting started

- In the MATLAB command line type **simulink**. Simulink's Library Browser will appear.
- From this Simulink window click "File: New: Model" to open a new area (file) entitled temporarily "untitled".
- This is where we place the different types of blocks that we click-drag from the library of blocks.
- Later on don't forget to "Save as" under a name of your choice.

Simulation of the Logistic Model

$$\frac{dy}{dt} = ay(1 - \frac{y}{K})$$

- Let's plan what type of components we may need:
- First and foremost: An "integrator" block (to represent the relationship between the variable y and the variable dy/dt)

Simulation of the Logistic Model

$$\frac{dy}{dt} = ay(1 - \frac{y}{K})$$

- We need two “constant” block (one for the constant a and another for the constant K)
- We see (in the equation) that a and y get multiplied. Do we need a “Product” block?

Simulation of the Logistic Model

$$\frac{dy}{dt} = ay(1 - \frac{y}{K})$$

- Do we need two more Product blocks, to perform y/K and the multiplication between ay and (1-y/K)?
- How do we do a division of variables?
- Do we need a “summation” to implement 1-y/K?

Simulation of the Logistic Model

$$\frac{dy}{dt} = ay(1 - \frac{y}{K})$$

- Finally we may need display components, such as “scope” or “XY-Graph”.

Types of components needed for simulation of the Logistic equation

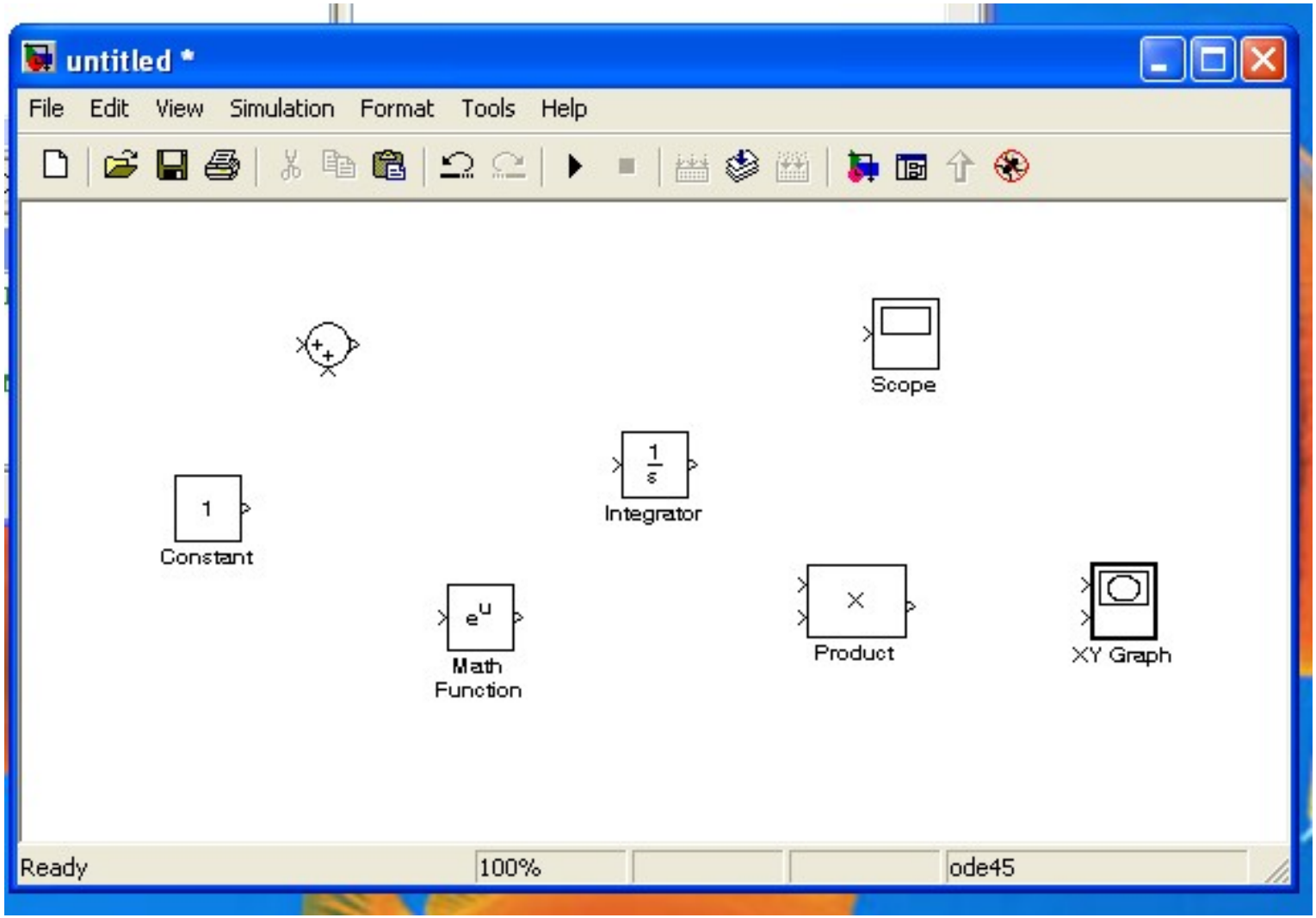

Libraries of components used

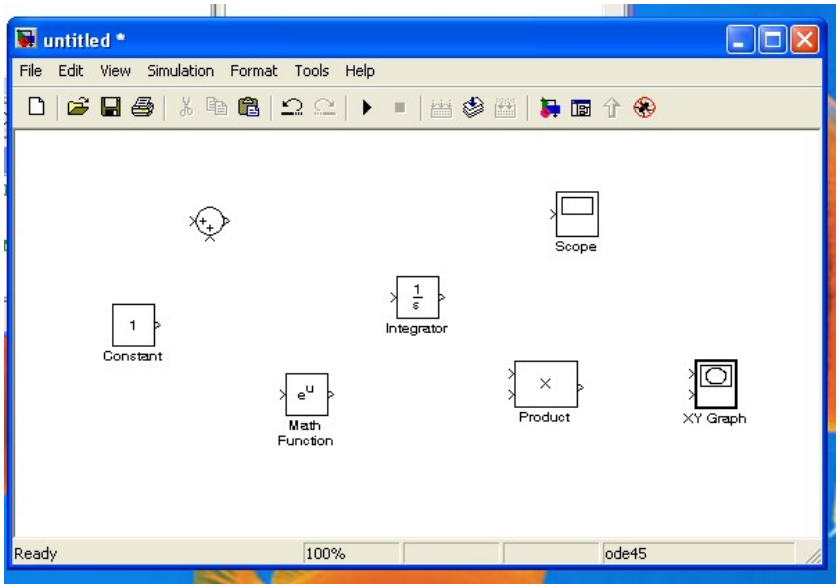

- From Continuous: Integrator
- From Math: Product, Sum, Math Function
- From Sources: Constant
- From Sinks: Scope, XY Graph

Explanation: Bringing the Integrator in

- In the Library Browser double click on the block "Continuous" to view the selection of continuous-time blocks that are available .
- Click-drag the Integrator block into the "untitled" area and leave it there.
- Double click on the Simulink title (in the library list) to fold back the elements of "Continuous“, or just click a new library, say “Sources”.

Comments about Integrators

- Integrators are the “heart and soul” of dynamic simulation.
- The whole structure of the diagram is determined by inspection of the mathematical model ←→ Derivative expressions forms the input of each integrator block.
- Initial conditions are assigned to each integrator’s output.

Duplicating and Alignment of Components

- Maximize the work area.
- Select a component that needs to be duplicated (for instance, we need three Product blocks and three Constant blocks). While pressing Ctrl drag out extra copies.
- Align all blocks, by clicking on a block to select it, and dragging it to a desired location in the work area. Arrange the blocks according to some pre-sketched plan (based on inspection of the equations).

After alignment; Before wiring and labeling

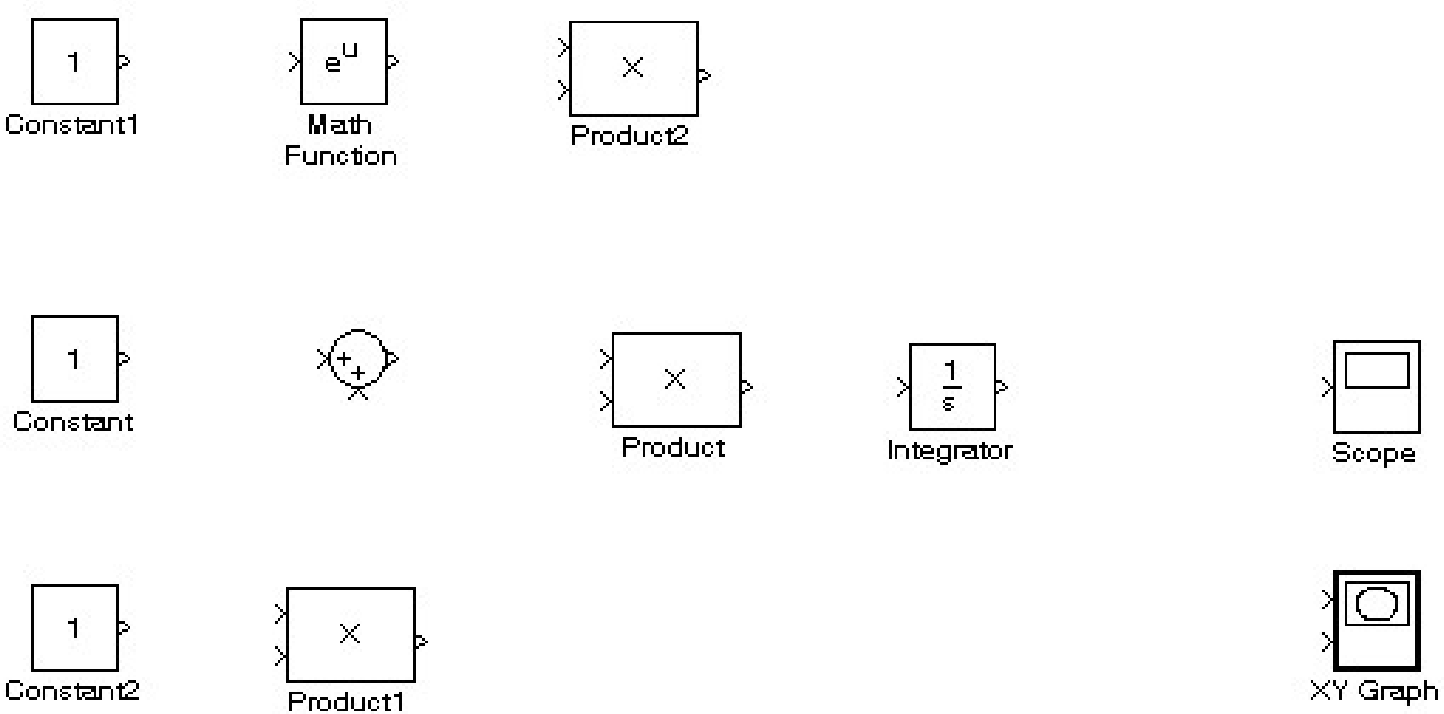

“Wiring” components

- To connect one block to another, bring the cursor to the > terminal of the source block, click and drag to the > terminal of the target block. When you let go of the mouse an "arrowed" connection is established.
- If target > terminal is unambiguous, there is a shortcut: Select the source, press Ctrl and click on target block – wire is drawn automatically.
- When branching a wire, bring cursor to point of branching, press Ctrl, and draw line.

Complete simulation diagram

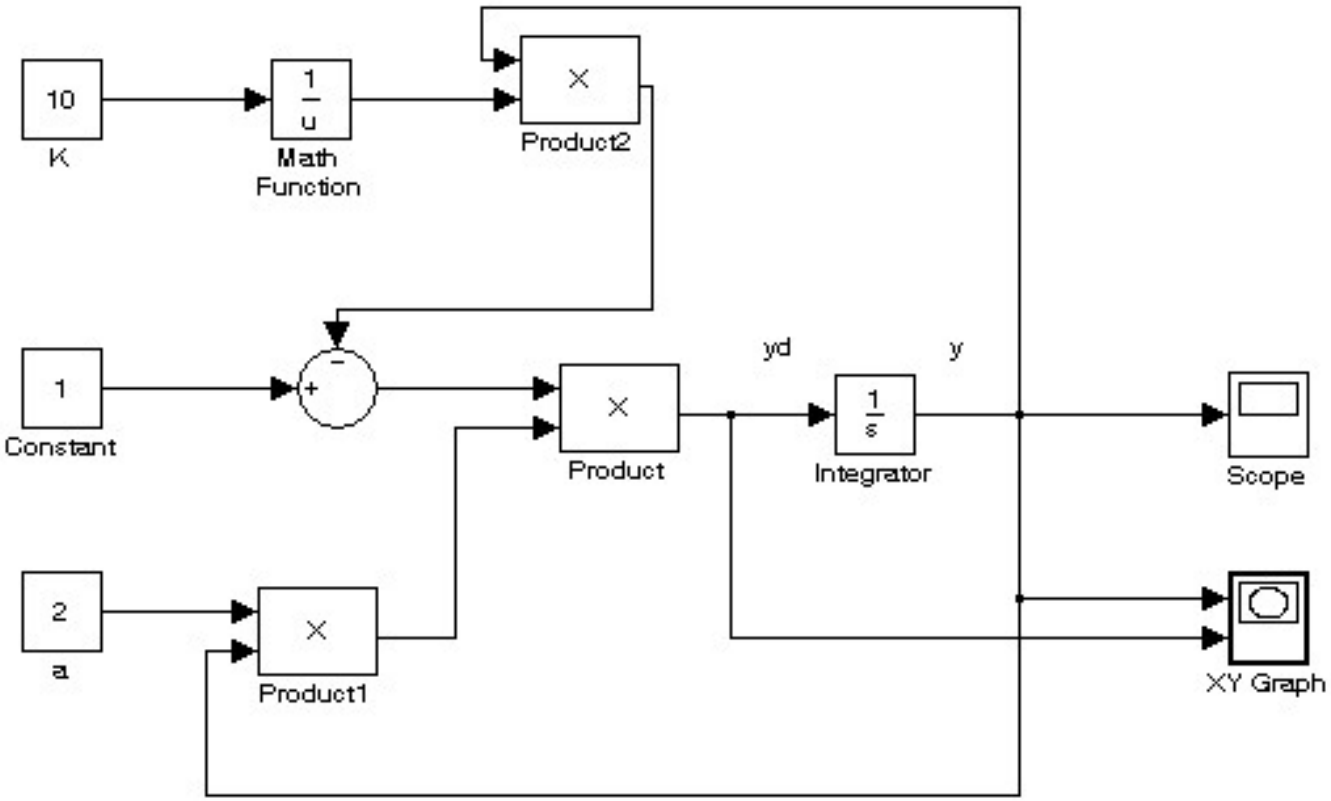

Parameters assignment and adding of labels

- Double click on a block to open a dialog box that will allow you to assign parameter values.
- When you double-click anywhere in the diagram area, a text box opens up. You may insert variables and block names, and detailed annotation anywhere you choose. That's how the names "y" and "yd" were inserted.

Summation Block

- The basic Sum block can be expanded to include more inputs, and you may orient the entry point of the inputs by clicking on the block and using the "List of signs" dialog box.
- The default Sum block uses “|++”.
- The particular arrangement shown in the figure was obtained using the arrangement “-+|".
- Play a little with the block: Watch the effect of adding or deleting space symbols "|" .

Flipping or rotating blocks

- To flip a gain block by 180 degrees, select the block and then select "Format: Flip Block" from the upper toolbar menu.
- You may also rotate blocks, using similar tools.
- Here we had no need to rotate or flip.

Simulation Control Parameters

- Need now to set up the simulation parameters (such as final time for the simulation). Select "Simulation" from the upper toolbar, and further select "Simulation Parameters". The default final time was set to 10.0. Let's leave it like that. Later we may decide (based on the results) to enlarge or reduce that parameter (to get a clearer output), and simulate again.
- The default numerical integration method (ode45) is good for many basic applications. Ok the selection, and "Start" the simulation. You will hear a pinging sound when the simulation is done.

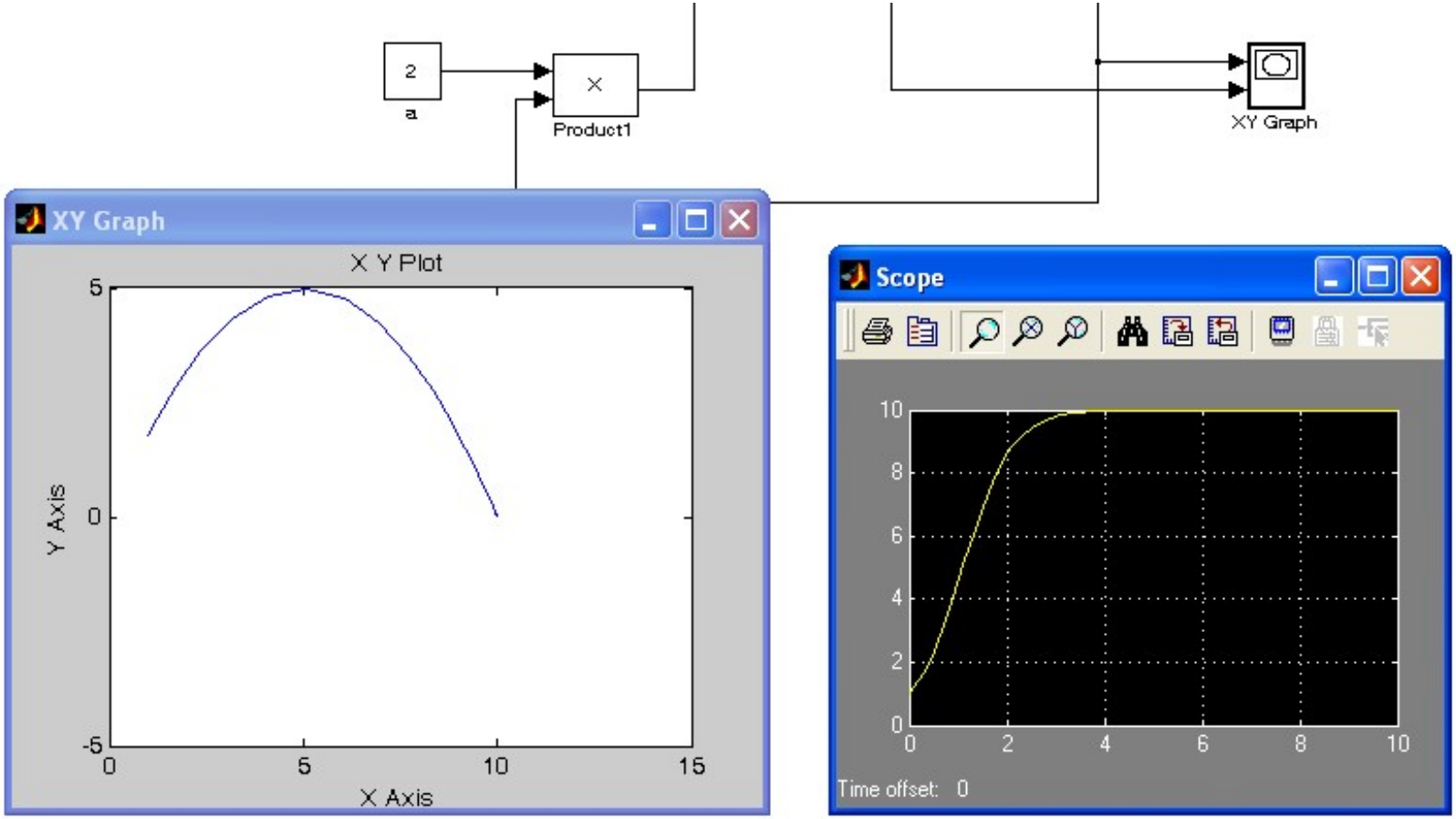

Output graphs for y_0=1

Scope and XY Graph blocks

- Click on the scope to see the output signal. You may maximize the screen and "Autoscale" the output graph, clicking on the binoculars icon.
- In XY Graph the upper input is the X-axis and the lower input is Y-axis.
- Value ranges were guessed. Sometimes need to adjust iteratively.

Viewing multiple signals

- You may create multiple copies of the scope block and use each scope to monitor a different signal. When a simulation is complete, click on the scopes one at a time to watch the various signals.
- If we want to watch both signals y and yd on the same plot, we need to use a multiplexer block. From the Simulink Library select "Signal Routing" and click-drag a "Mux" block into the work area. Insert Mux between integrator and the scope. Connect the signals of interest to the Mux's inputs, and the Mux's output to the scope's input.
- You may add more inputs to Mux. See multiple signals to determine the color code.

Outputs: y(t) in yellow, yd(t) in purple

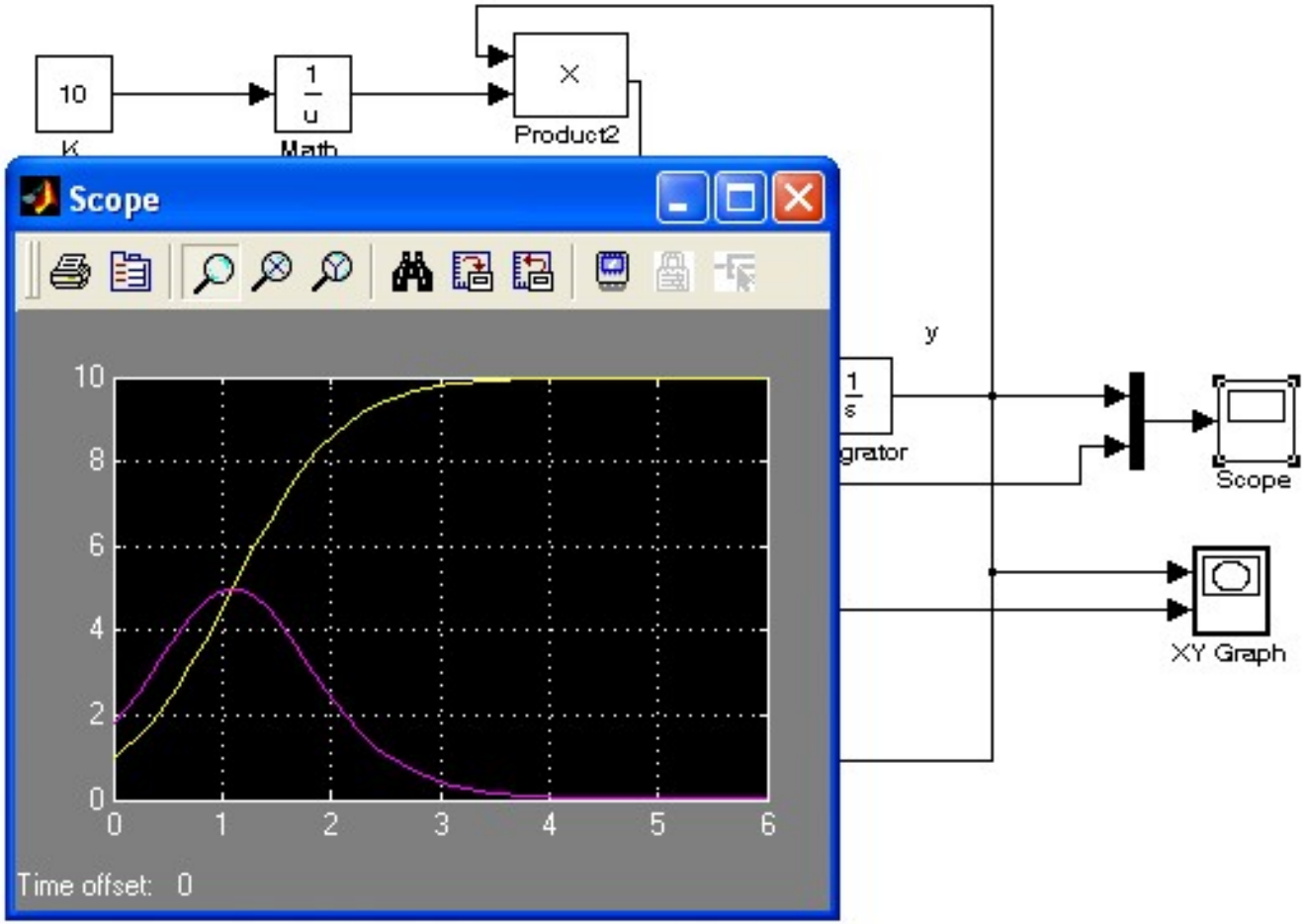

Scope printouts

- You may print a scope output. Curves show on a white background, yellow being the first color. Visibility is an issue. One may use a “dummy” zero constant as the first Mux input – this gets rid of the yellow output.
- Scopes are not intended for high quality plots – for that, we can send output to Matlab.

Use of Fcn block to accomplish the same simulation

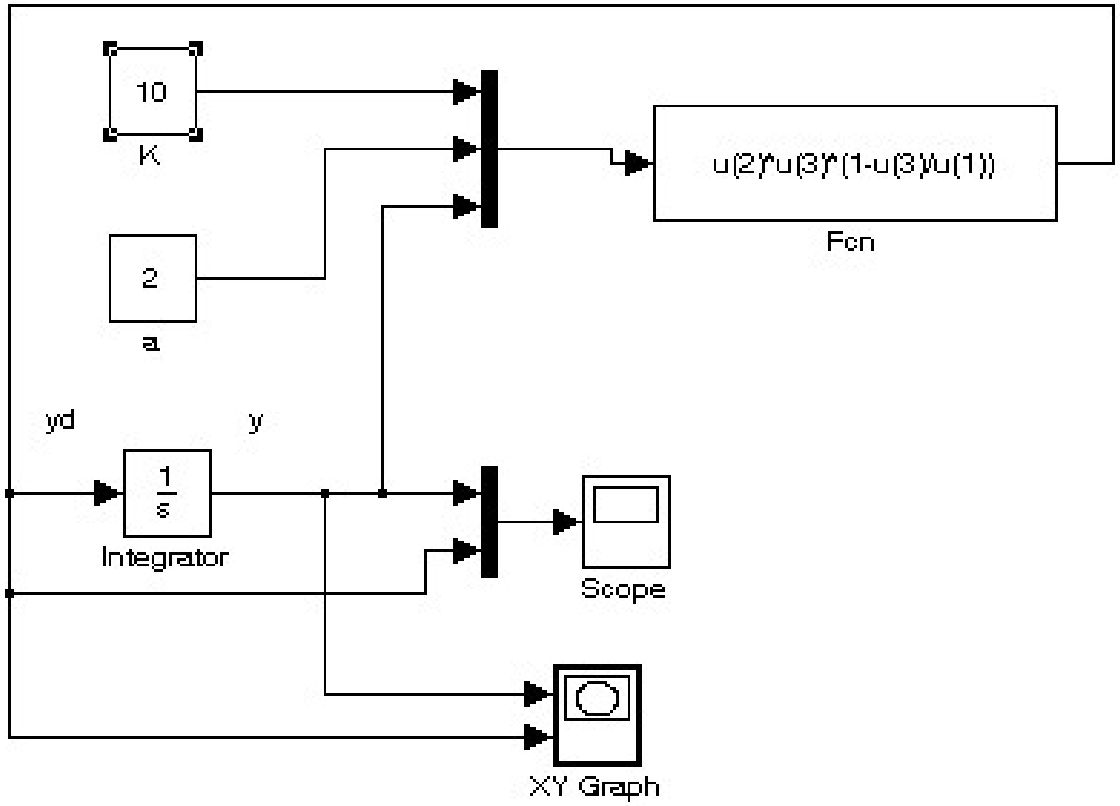

Explanation of Fcn block

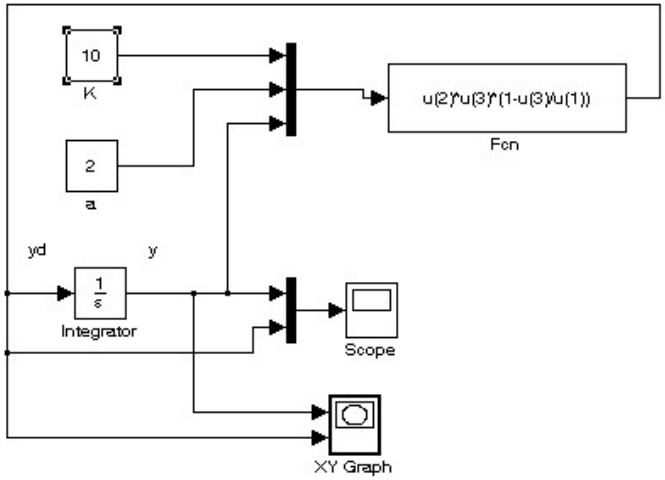

- Right-hand side of equation can be written analytically, in terms of the elements of a vector u.
- Here: u(1)=K, u(2)=a, u(3)=y

Simulink to MS Word

- To bring Simulink created block diagrams into a Word document, use the ctrl-C and ctrl-V sequence. Another method is to "Print Screen". Then from the Windows page use Start: Programs: Accessories: Paint. Then Edit: Paste. Enclose the figure by a suitable rectangle. Cut the rectangle out and leave the Paint program. In Word do "Paste". You may move and size the block diagram object.
- You may also use Photo-Editor or Photo-Shop.

Printing of Simulink output results

- Scope’s default background color is black. One can print directly from a scope, and printing default background is white.
- Problem arises if one first moves scope output to a Word document, and then if we decide to print the document, scope outputs may consume too much ink.
- Can we create white background on the screen?

Example from a later lecture (disregard the details)

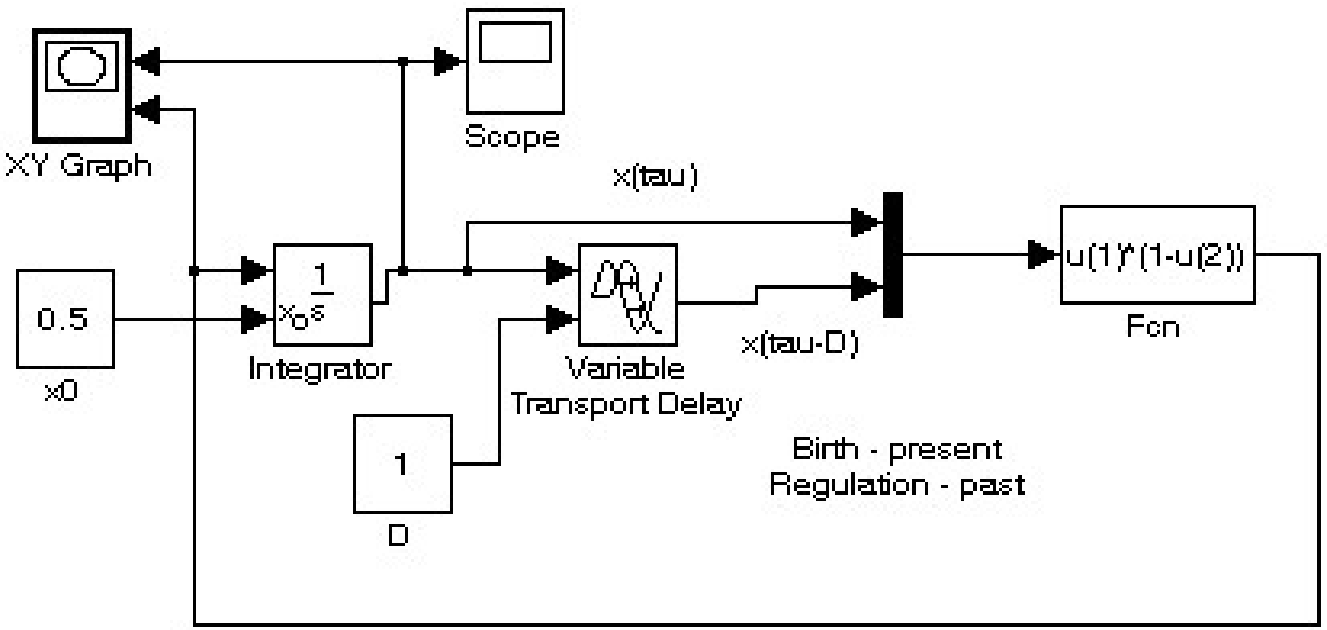

We chose External Initial Condition and Pure Time Delay parameter, using Constant blocks, for convenience of changing those from one run to a next

Default simulation parameters

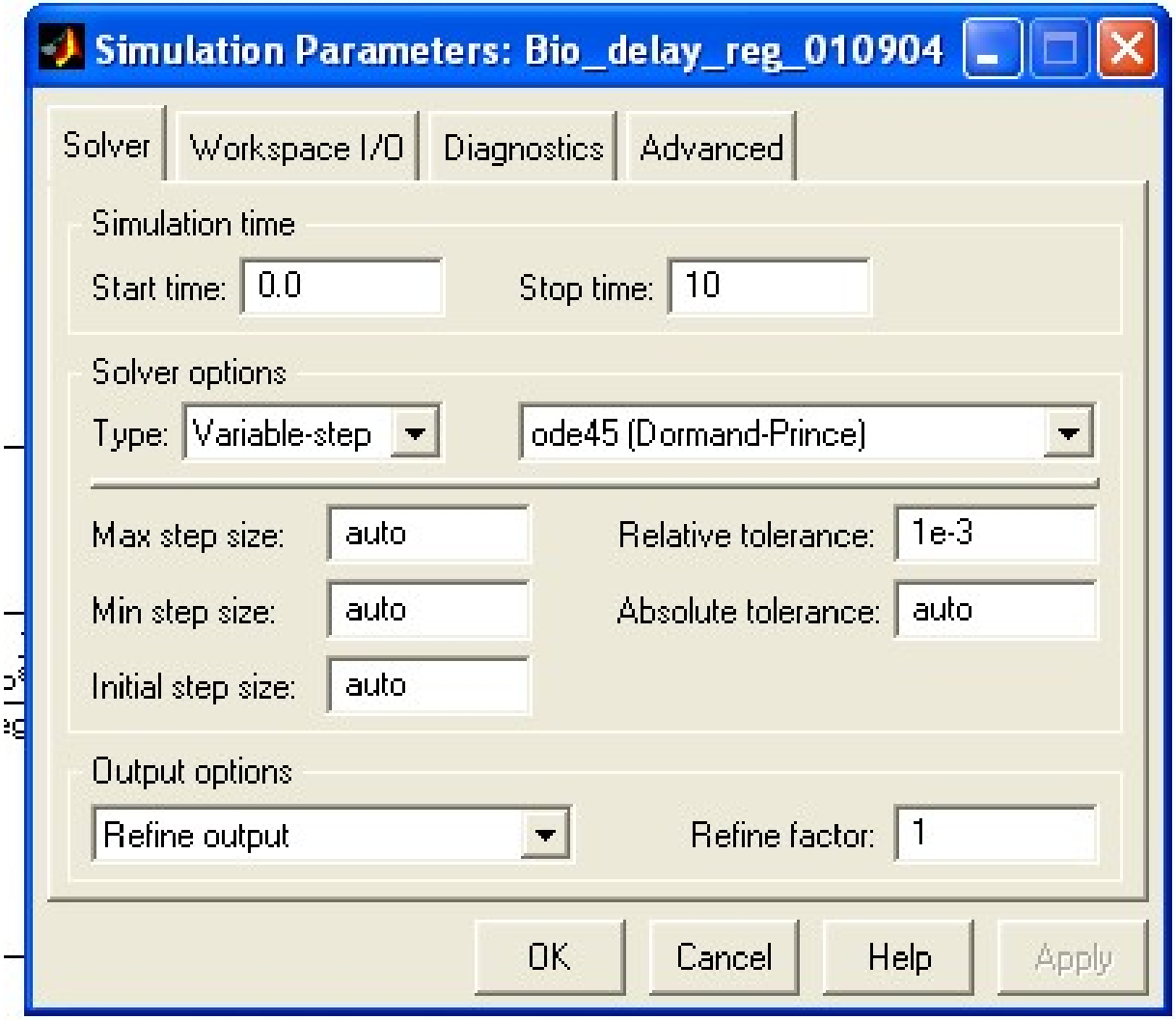

As we run with the default parameters, a XY plot pops up

We see a phase-plane plot that converges to x=1; It would be nice to be able to edit – labels, grid etc.

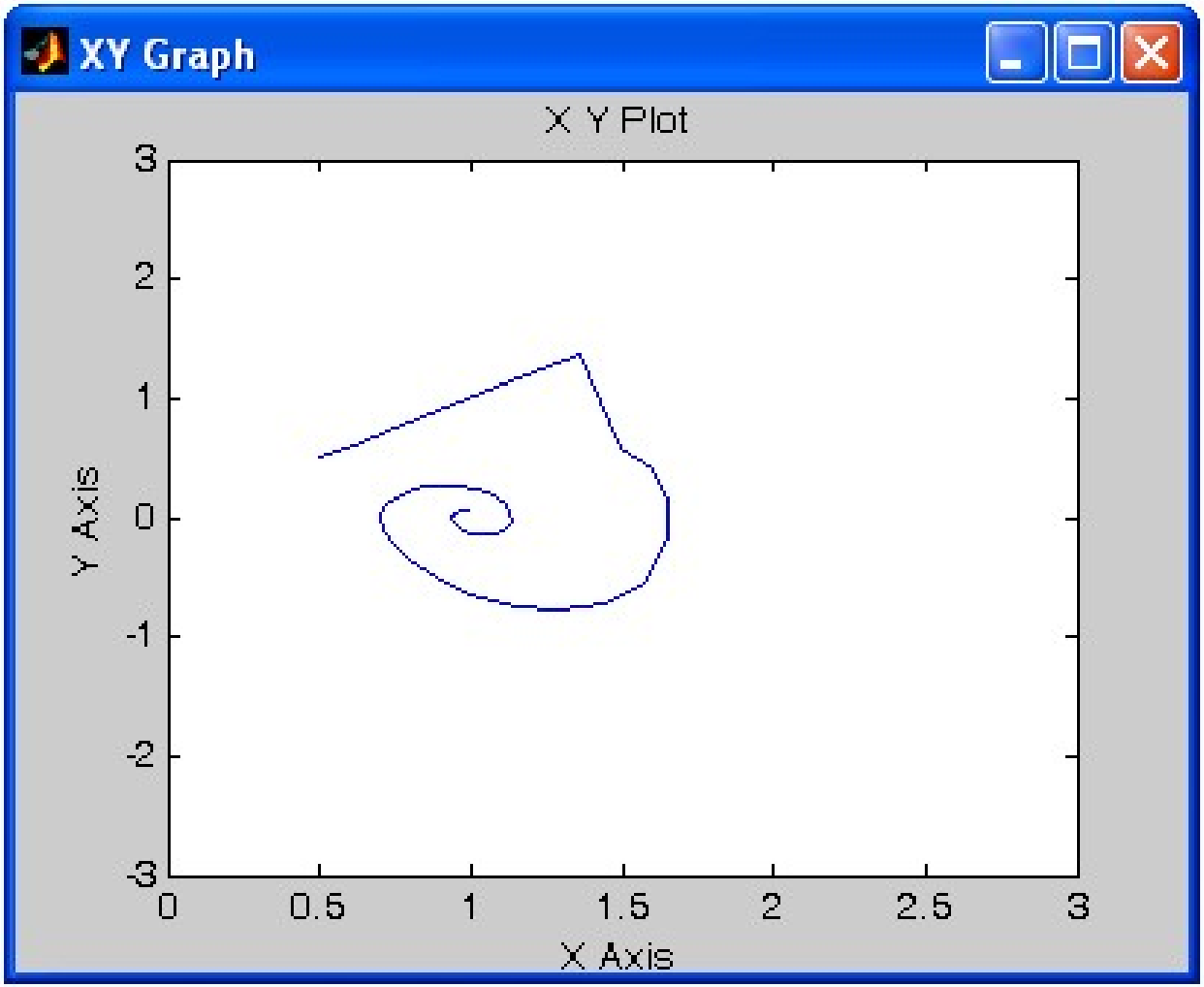

Scope's parameters set-up

- Clicking on the binoculars icon performs automatic adjustment of the y-axis scale to best fit the output, according to the recorded maximum and minimum values of the plotted signals.
- Another useful set-up (needs to be done prior to running the program) is to click scope <u>parameter</u> icon (2nd from left):

Scope's Data History set-up

Increase as necessary:

To send scope's plot to Matlab:

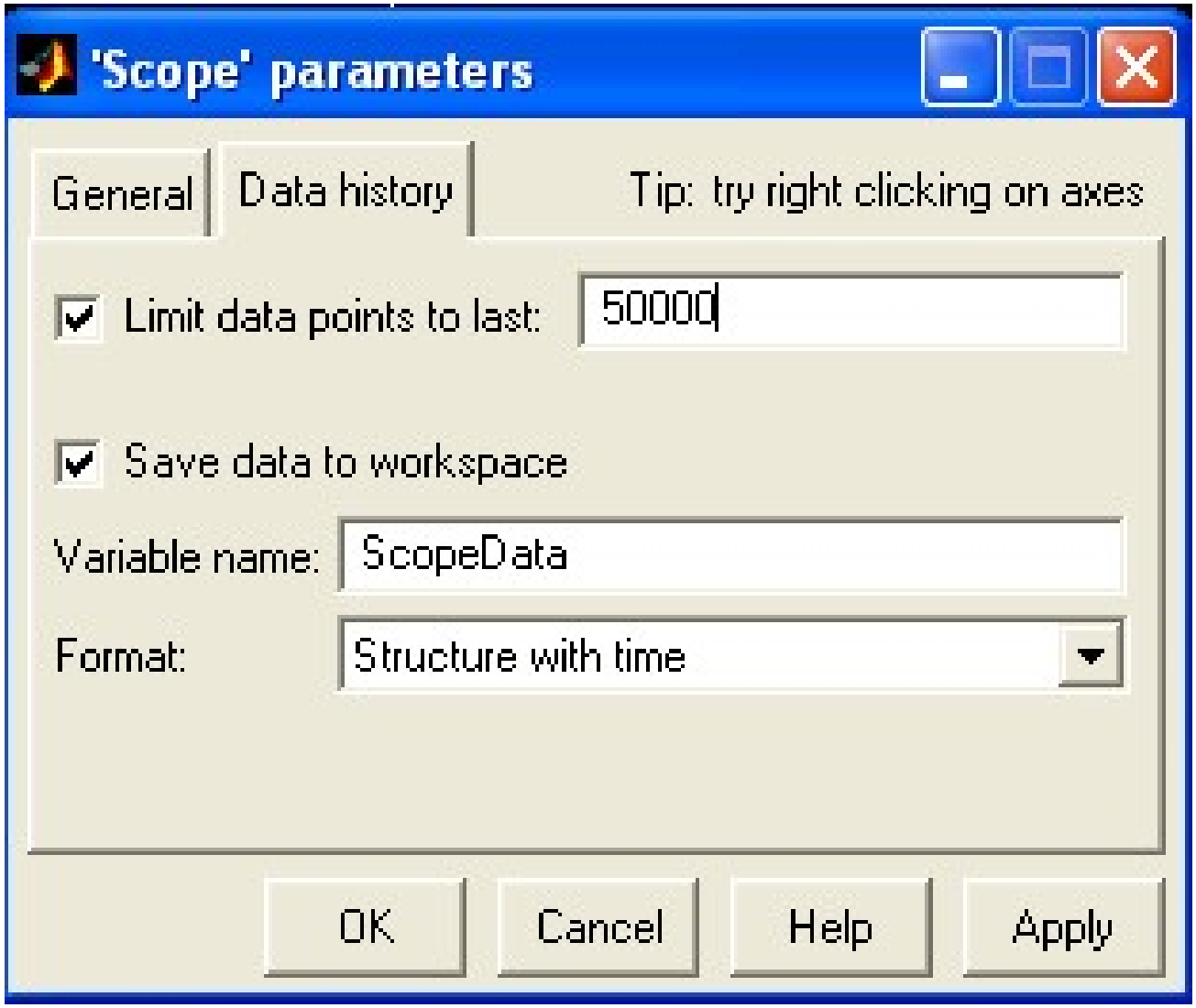

What exactly is sent to Matlab?

- After Simulink program runs, a matrix named ScopeData (or another name of your choice) is created.
- If format selected is “structure with time”, the first column of the matrix is the simulation time vector. Other columns are the plotted variables.
- Here ScopeData has 2 columns and many many rows.

How to change scope's background color to White:

- Minimize Simulink page to go back to Matlab's Command line.
- If you type ">> simplot(ScopeData)" you will get the exact scope output, but now more editing is possible!
- Do first ">> whitebg(simplot(ScopeData))" to obtain a scope output with white background:

Editable + white background scope output

Before editing

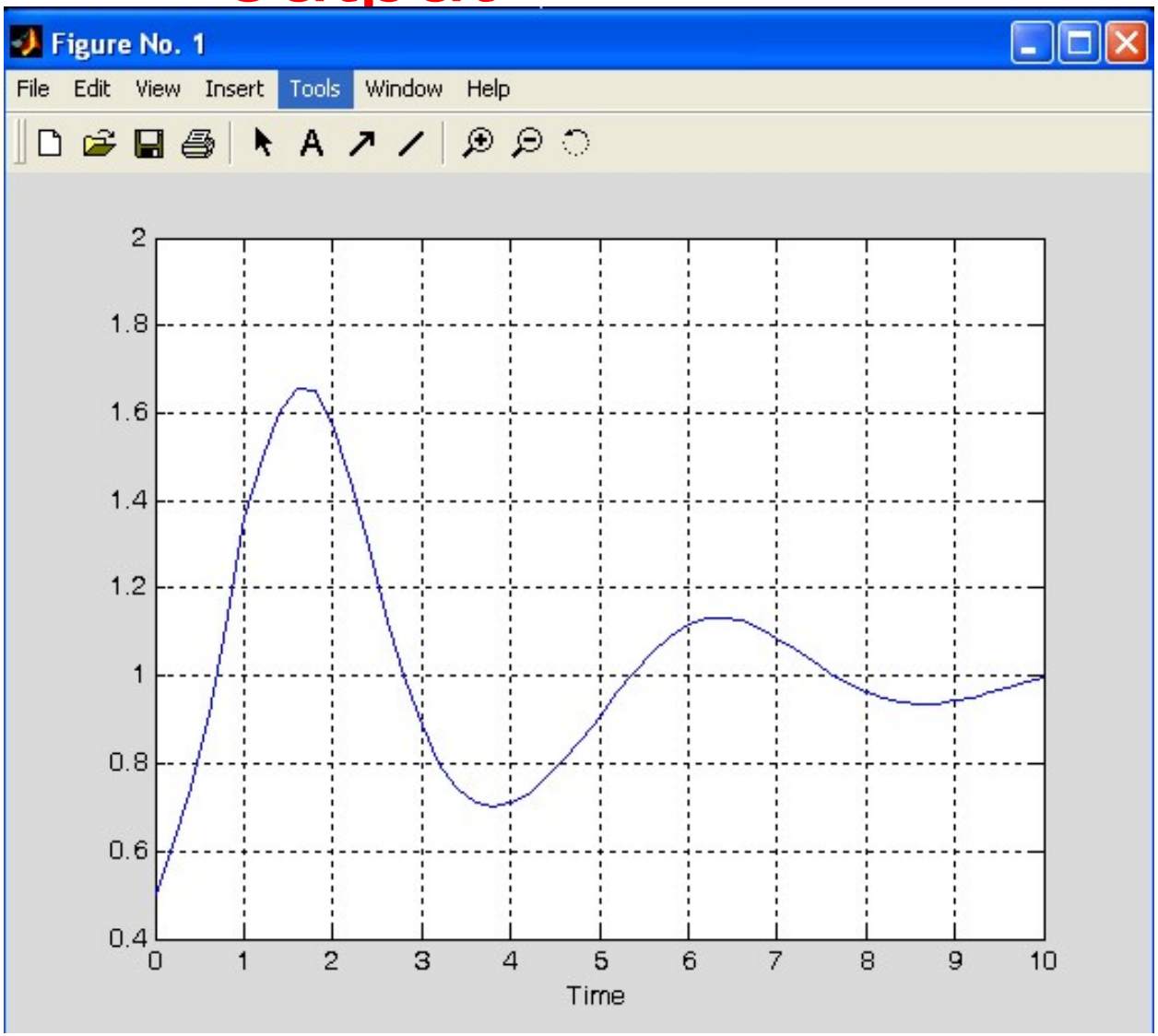

After editing: can add text, axes names, figure title etc

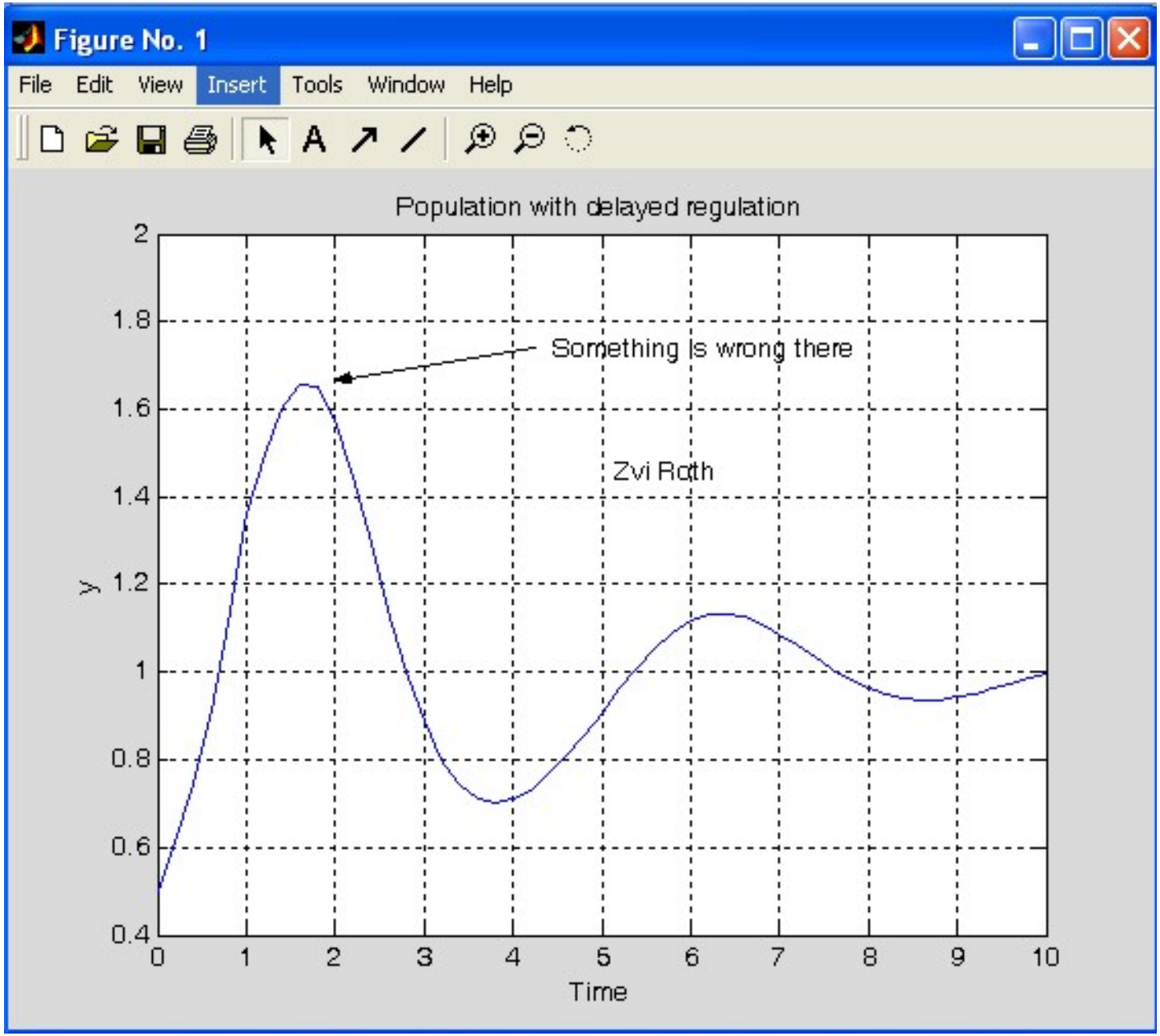

After zooming in we can see more clearly a discontinuous section of the graph, indicating an erroneous simulation parameter

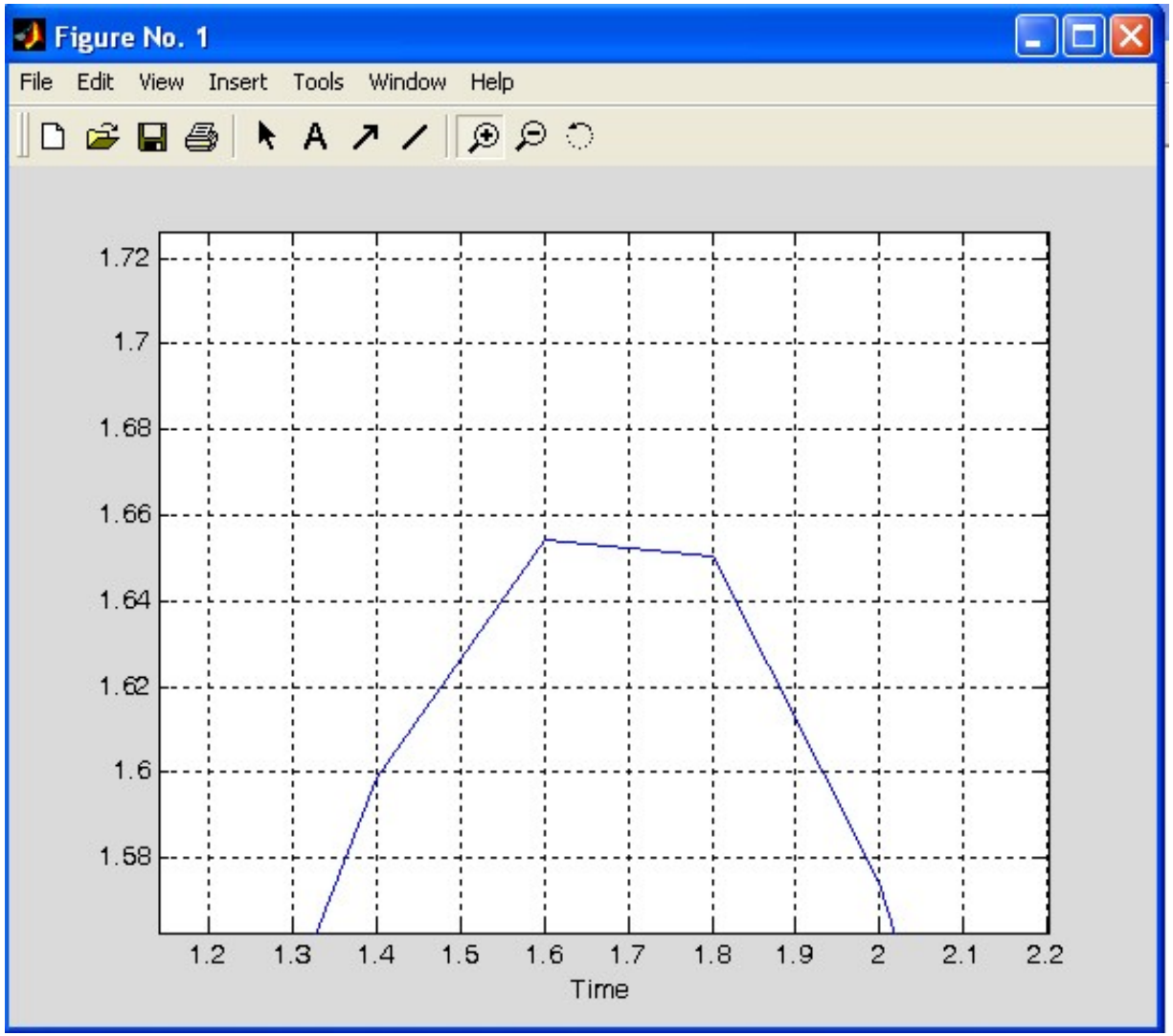

Need to run program again: Go to Simulation Parameters and modify the "Refine Output" parameter:

Replace Refine Output =1 by 2, which still produces an non-smooth graph.
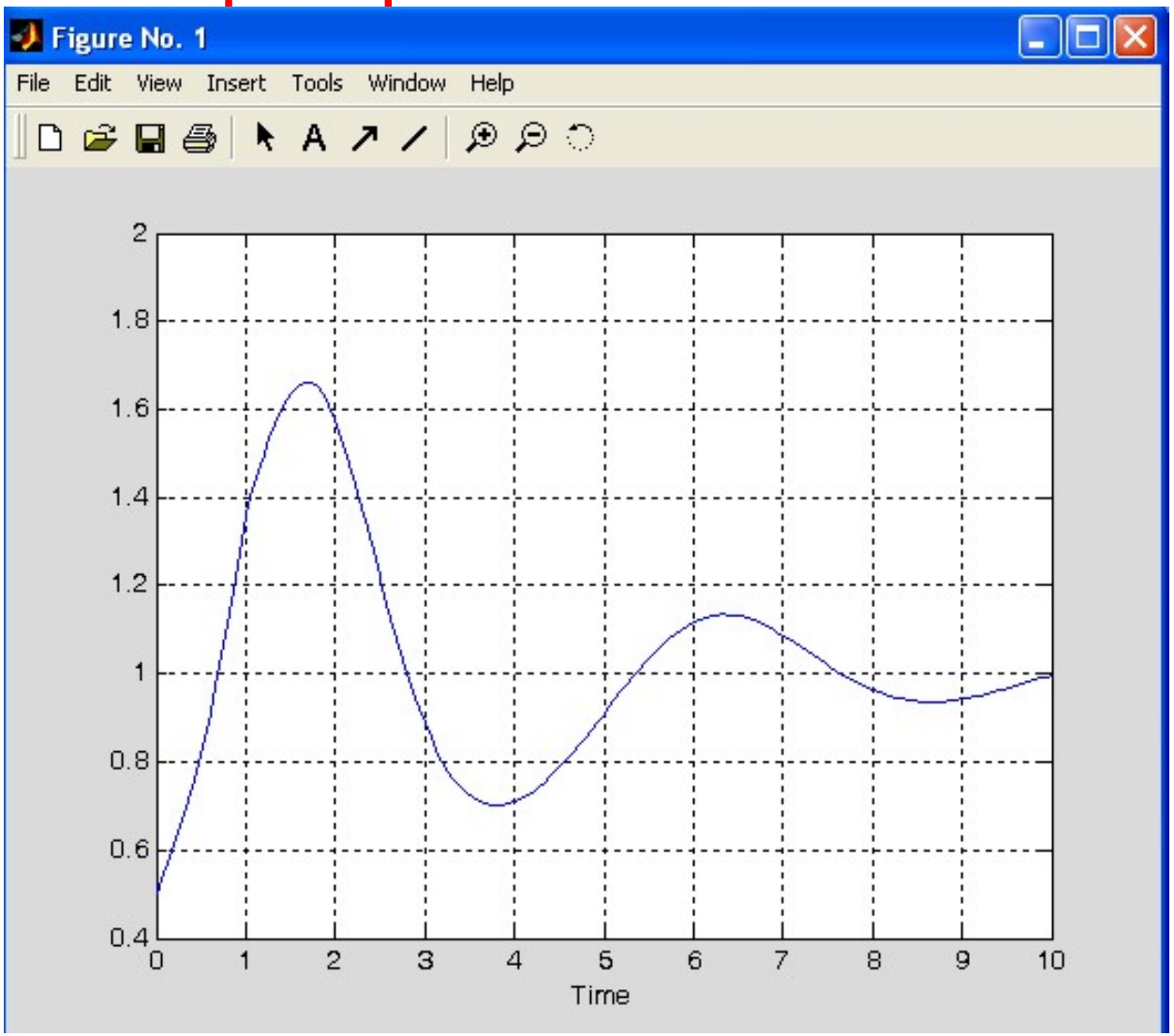
Right figure was obtained with a Refine Output = 3