Bio-Systems Modeling and Control

Lecture 26
Analogous Electrical Circuit Models

References:

- Michael Khoo “Physiological Control Systems” Wiley / IEEE Press 1999.
- Dr. Khoo’s PowerPoint slides (USC, Biomedical Engineering Dept)

Ohm's Law

- In a component called resistor the voltage V (across the component) and the current I (through the component) obey Ohm's Law $V=IR$, where R is the component's resistance.
- V represents the "effort" and I represents the "flow".
- "Resistance" concept applies to many other different types of physical systems – mechanical, fluid, heat and chemical.

Generalized Ohm's Law – Mechanical Systems

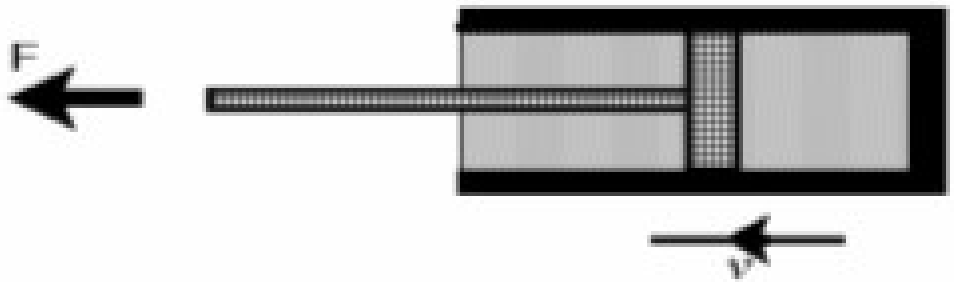

$$F = v\, R_m$$

- Piston of the dashpot moves at a velocity v ("I") that is proportional to the applied force F ("V").
- "Resistance R_m" relates to the viscosity of the fluid inside the dashpot.

Generalized Ohm's Law – Fluid System

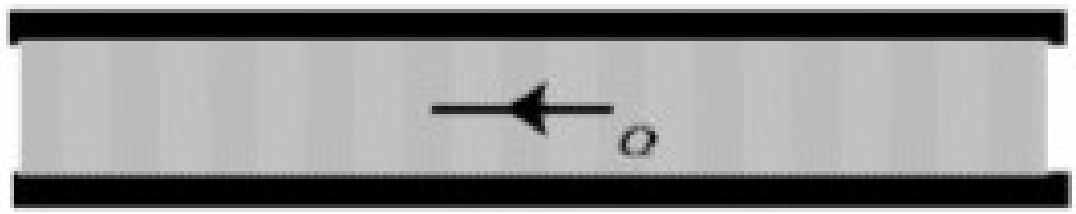

$\Delta P = Q R_f$

$\Delta P = P_1 - P_2$

- Q is the volumetric flow ("I") through a rigid tube. ΔP is the pressure difference across the two ends of the tube (this is "V").
- Fluid resistance R_f is directly related to the viscosity of the fluid and the tube length, and inversely related to the tube's cross section area.

Generalized Ohm's Law – Heat Transfer System

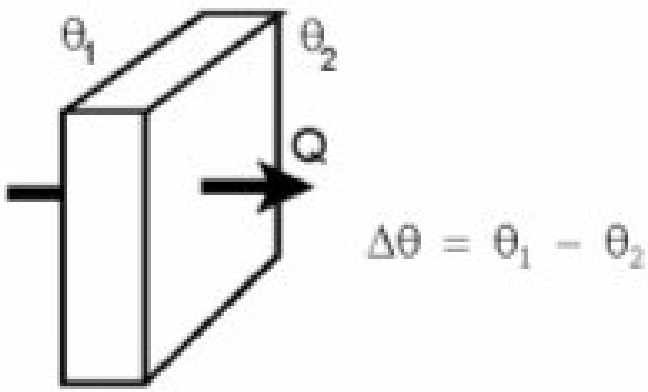

$$\Delta\theta = Q R_t$$

- Heat flow Q ("I"); Temperature difference Δθ ("V").
- Thermal resistance R_t relates inversely to material thermal conductivity and thickness, and directly to material area.

Generalized Ohm's Law – Chemical Systems

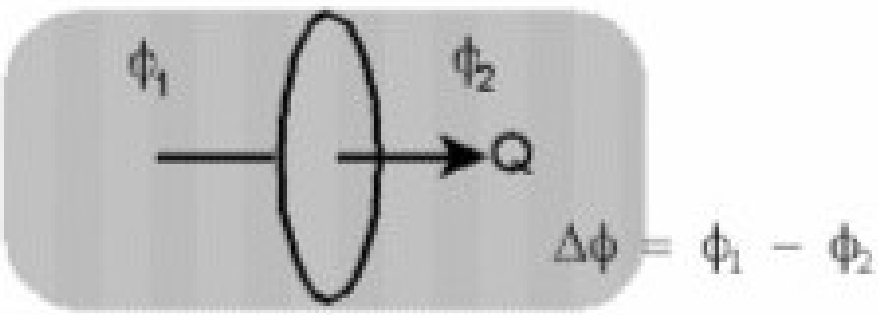

$$\Delta\phi = Q R_c$$

- Diffusion through a thin membrane.
- Concentration difference is "V", and flow Q through the membrane is "I".
- Diffusion resistance = $(\text{permeability})^{-1}$

Electrical Capacitors

$$i = C\frac{dv}{dt} \Rightarrow v(t) = \frac{1}{C}\int_0^t i(\tau)d\tau$$

$$q(t) = \int_0^t i(\tau)d\tau \Rightarrow q(t) = Cv(t)$$

- A component is called capacitor if current I through the component is proportional to the rate of change of voltage v across component. C is the capacitance.
- Capacitor can store electrical charge q.
- Voltage across C must be a continuous function of t – it cannot jump instantly.

Generalized Capacitor – Mechanical Systems

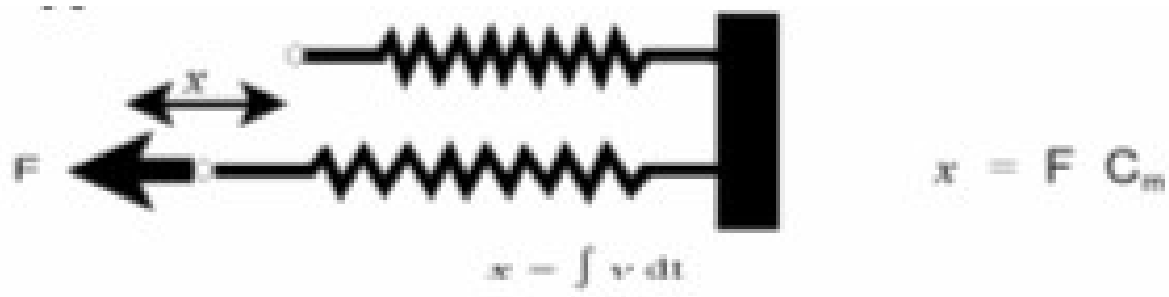

For an elastic spring, the applied force F is "V", the displacement x is "q", the <u>compliance</u> C_m is the inverse of the spring's stiffness represented by its elastic modulus k.

Generalized Capacitor – Fluid system example

- Fluid-filled elastic container is a fluid capacitor. Compliance is determined both by the container's elasticity and by the compressibility of the fluid.
- ΔP is "V" and change of volume is "q".

Generalized Capacitor – Thermal system

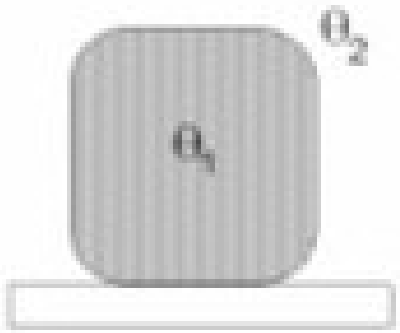

heat stored, $q = \Delta\theta\, C_t$

$\Delta\theta = \theta_1 - \theta_2$

- Thermal capacitance depends on the specific heat of the material and on the object's dimensions.
- Temperature difference is "V"; Stored heat - "q"

Generalized Capacitance – Chemical system

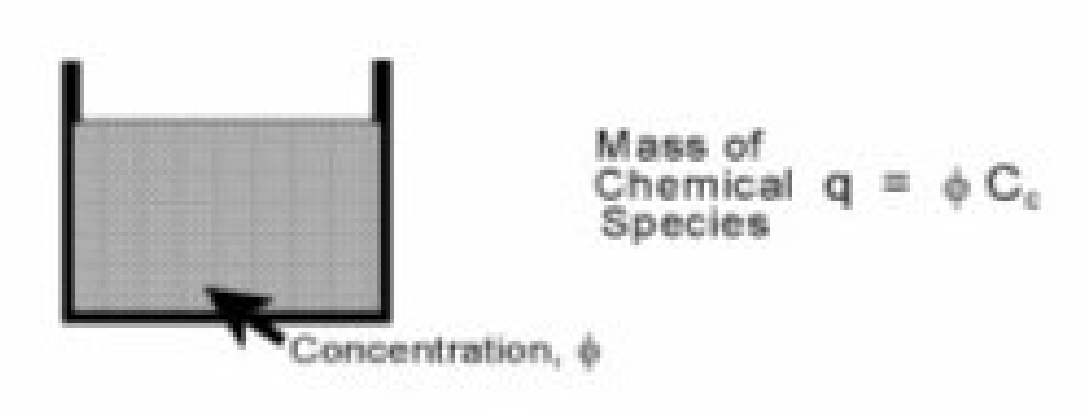

- Capacitance is the volume of the fluid.
- Concentration of the substance (in the fluid volume) is “V”; Substance’s mass is “q”.

Other analogies to electrical concepts:

- In a “resistor” energy is dissipated; In a “capacitor” energy is stored.
- V·I=Power: Mech. Sys - F·v=power; Fluid sys. – Pressure x Flow rate = power, etc. It is consistent.
- “Capacitor” stores “static” (potential) energy.

Generalized Inductance

- More common name is Inertance, which has to do with storage of kinetic energy.
- An electrical inductance (inertance) is defined as $V=L\cdot di/dt$.
- Mechanical inertance: $F=M\cdot(dv/dt)$, which is Newton's 2nd Law. Mass is the inertance.
- Fluids: Inertance relates to the relationship between fluid acceleration and applied pressure differential.
- No inertance in thermal or chemical systems.

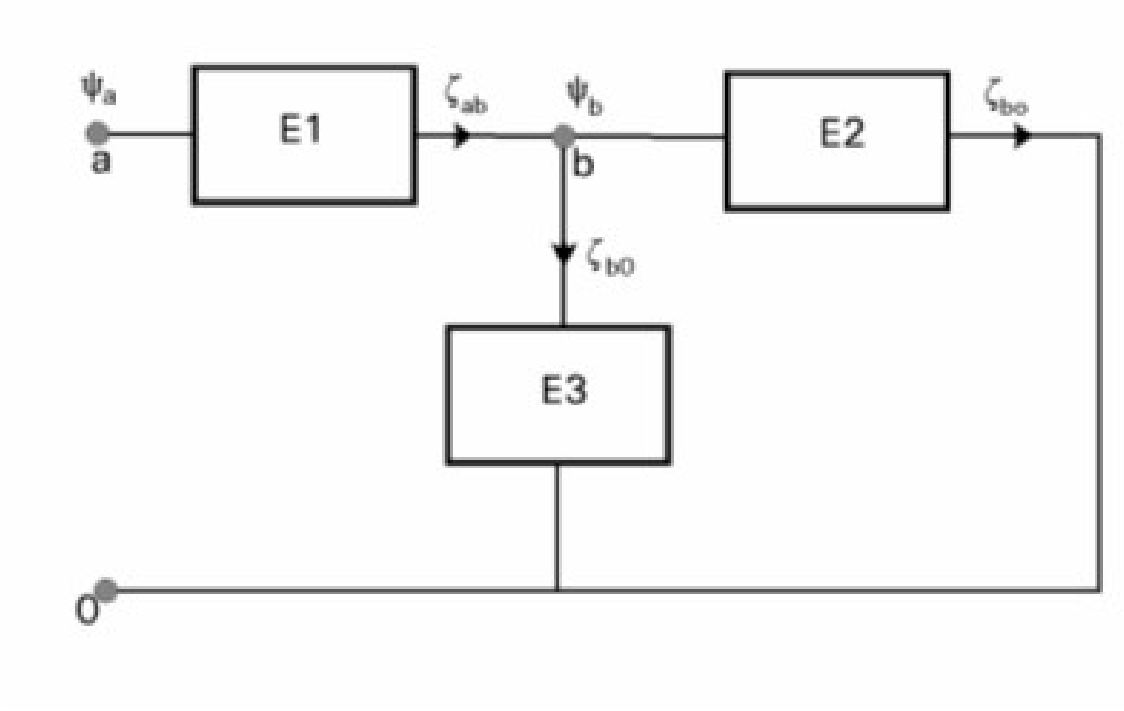

Generalized Kirchoff's Laws:

1. Algebraic sum of "across-variable" values around any closed circuit (loop) = 0
2. Algebraic sum of "through-variable" values through a given node = 0

Combinations of components (Electrical)

A: R's in parallel

B: R's in series

C: C's in parallel

D: C's in series

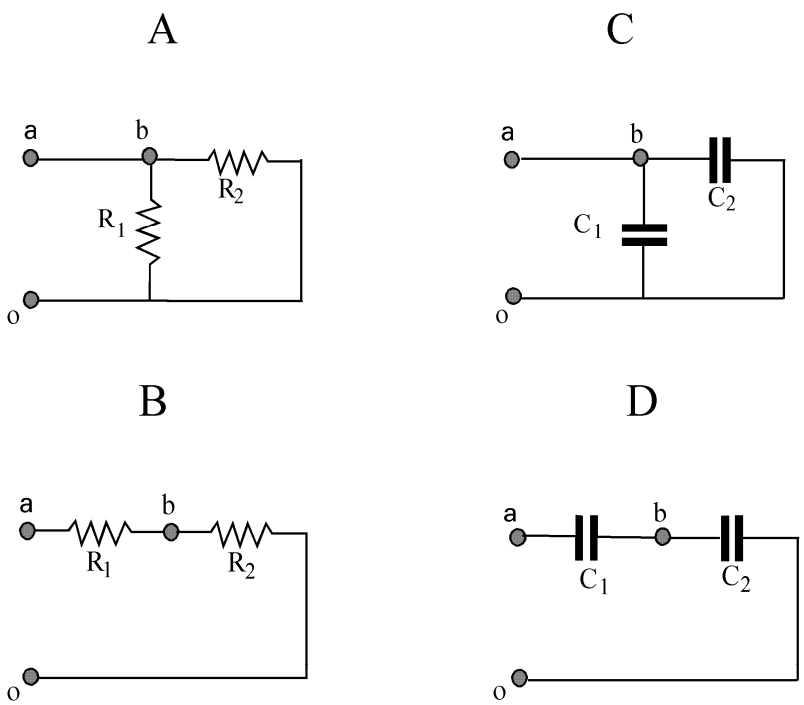

Combinations of components (Electrical)

A: $$R_{eq} = \left(\frac{1}{R_1} + \frac{1}{R_2}\right)^{-1}$$

B: $$R_{eq} = R_1 + R_2$$

C: $$C_{eq} = C_1 + C_2$$

D: $$C_{eq} = \left(\frac{1}{C_1} + \frac{1}{C_2}\right)^{-1}$$

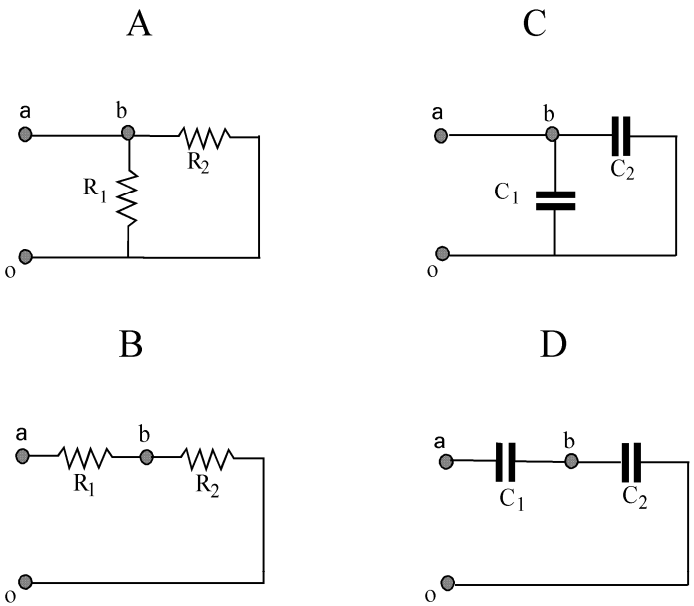

Combination of mechanical components

A: Both pistons are constrained to move at the same v: series connection!

Thus R_{eq} is sum of two R's

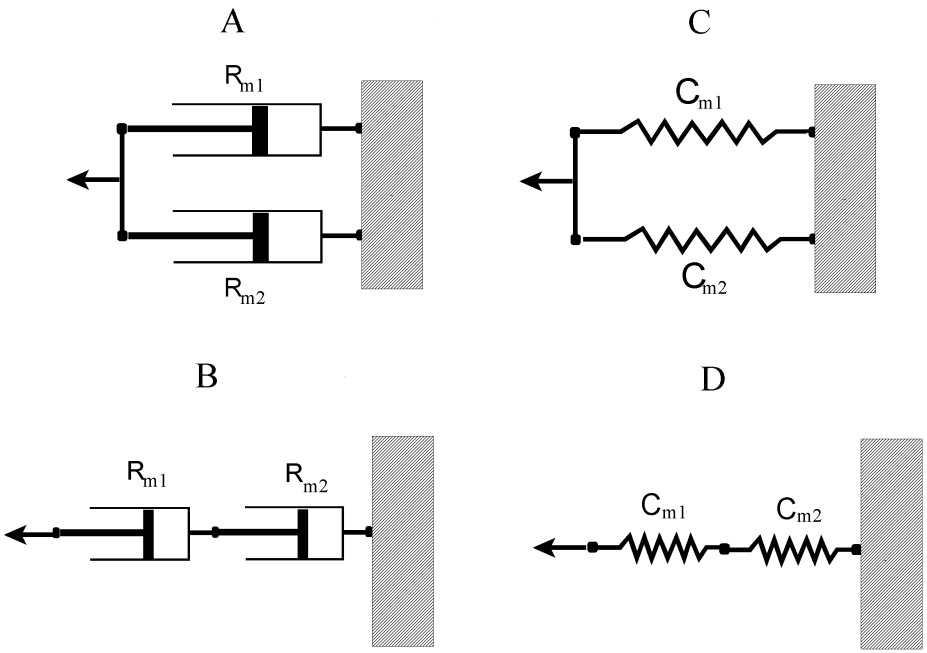

Combination of mechanical components

B: Same force is applied to both pistons : parallel connection!

Thus R_{eq} is $R_1 || R_2$

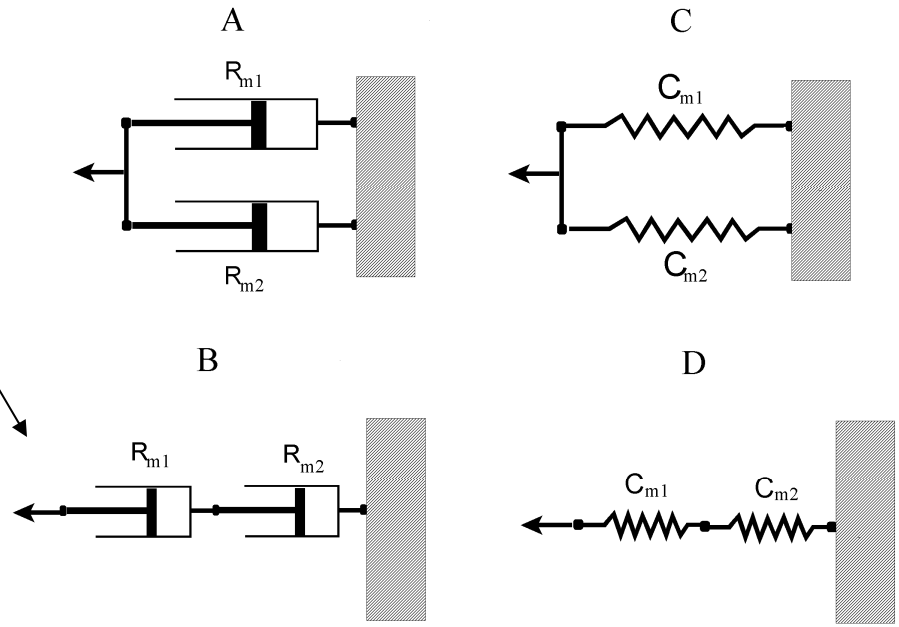

Combination of mechanical components

C: Same speed in both springs : series connection!

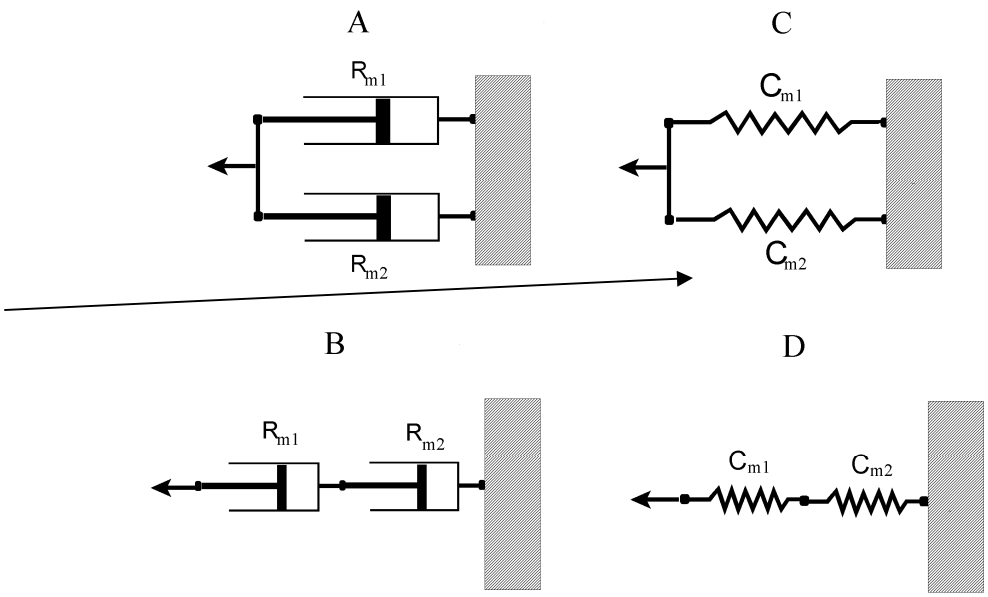

Thus C_{eq} is $C_1 \parallel C_2$ which leads to a sum of the springs moduli

Combination of mechanical components

D: Same force applied: parallel connection!

Thus C_{eq} is $C_1 + C_2$ which leads to a an overall spring constant smaller than each constant

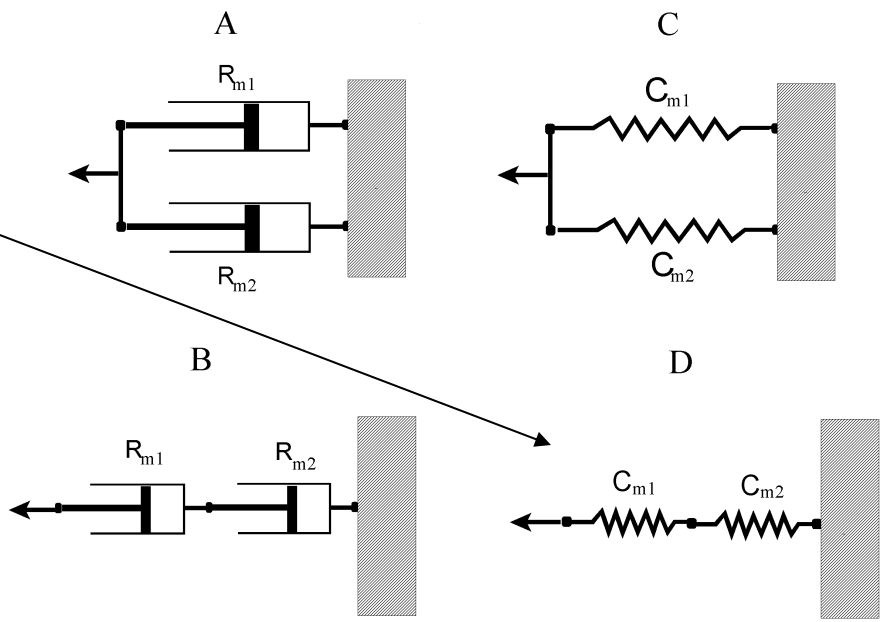

Example: Linear Model of Respiratory Mechanics

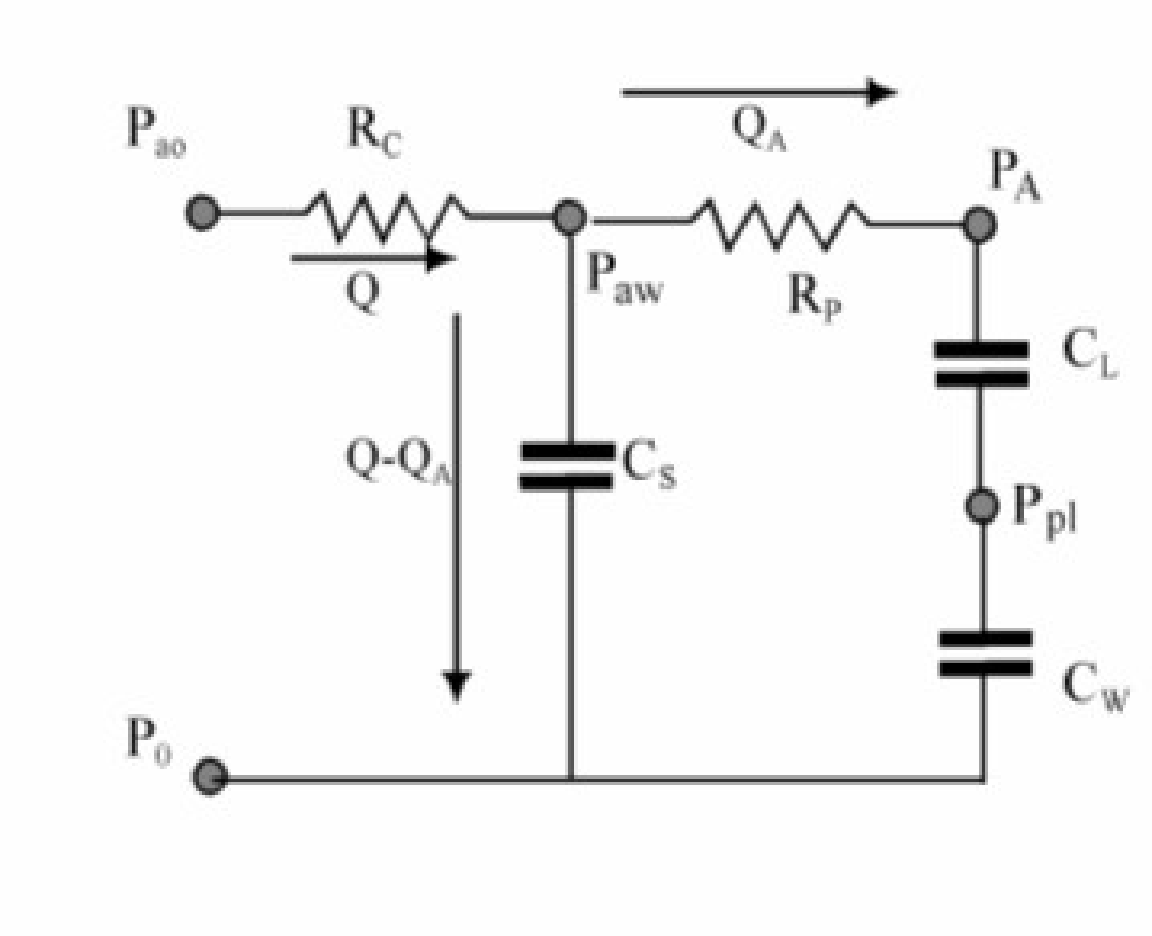

Respiratory mechanics: Fluid model resistances

- Lung mechanics – airways are divided into two categories: The larger (central) airways, and the smaller (peripheral) airways.
- Each airway has a fluid resistance R_C,R_P

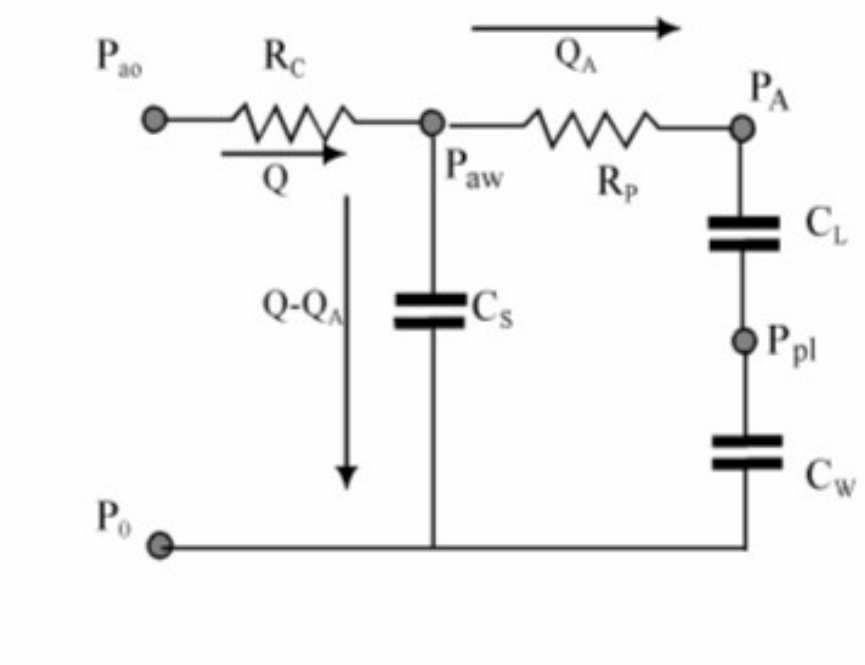

Respiratory mechanics – Fluid model capacitances

- Air that enters the alveoli produces an expansion of chest-wall cavity by the same volume.
- This is represented by a connection of the lung C_L and chest-wall C_W compliances in series.

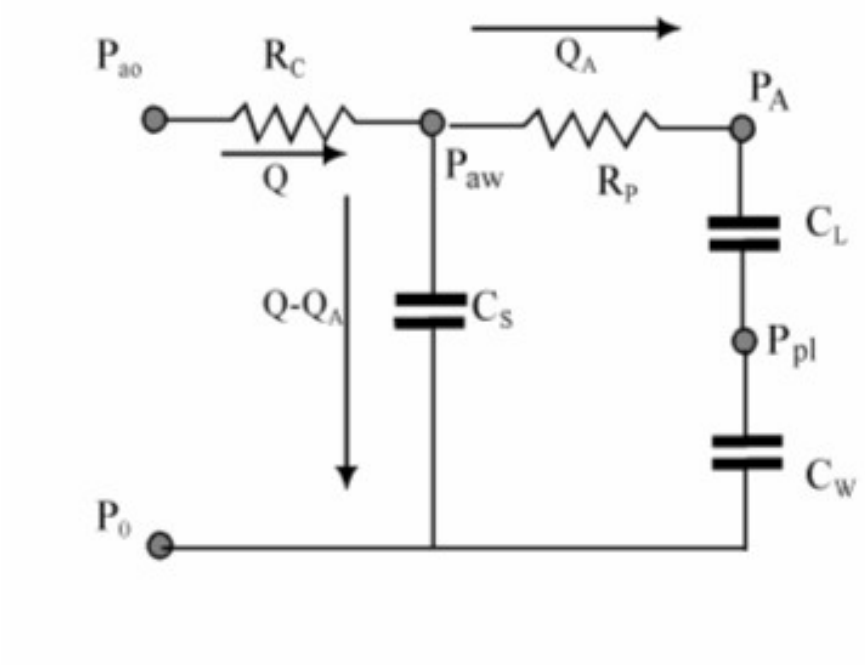

Respiratory mechanics – more about capacitances

A small fraction of the air volume that enters the respiratory system is shunted away from the alveoli as a result of compliance of the central airways and gas compressibility (represented by C_S)

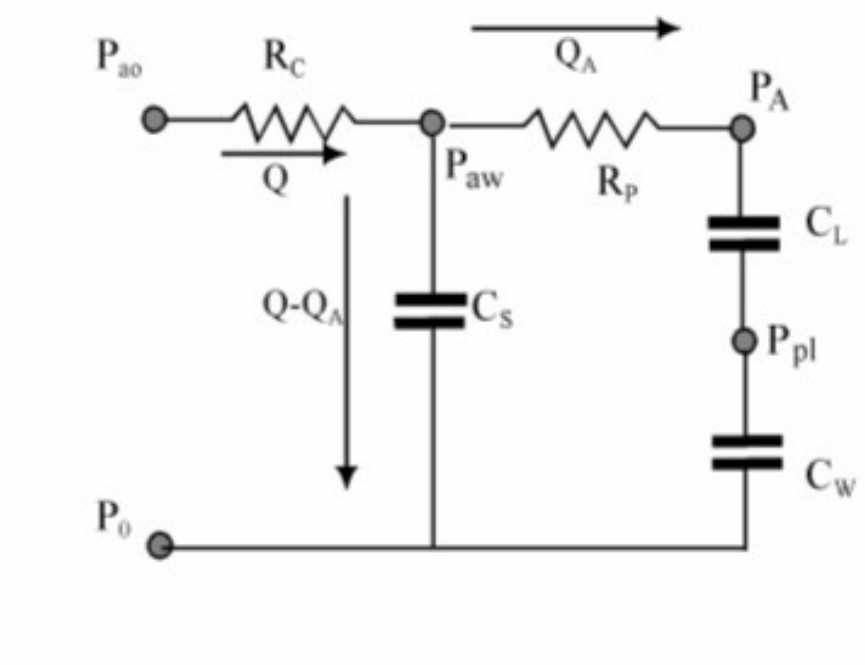

Respiratory mechanics model – applications and significance

The shunted air volume is normally very small, but it becomes more substantial if a disease leads to peripheral airway obstruction (an increased R_P) or a stiffening of the lungs or chest-wall (decreased C_L or C_W)

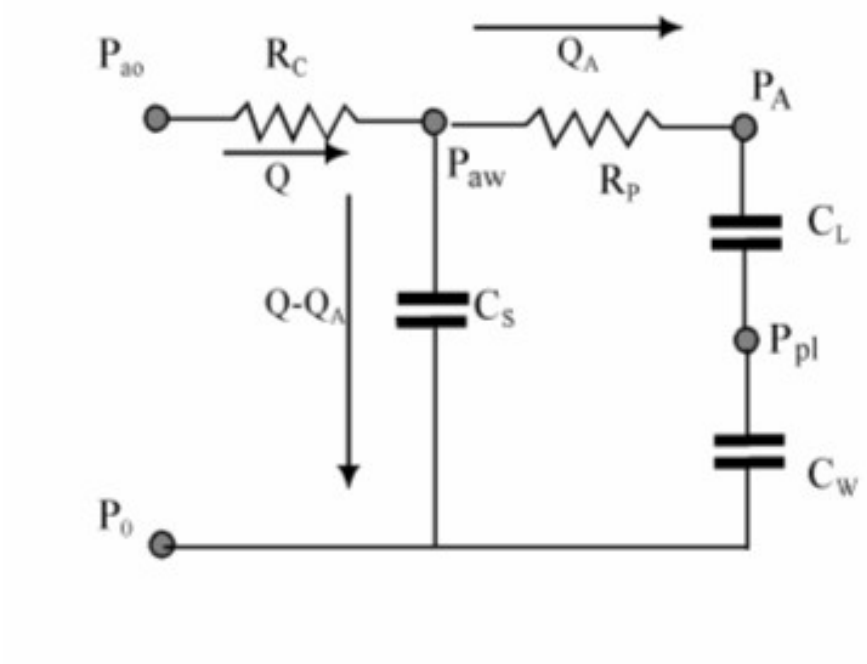

Respiratory mechanics – pressures in a fluid model are like voltages in an electrical model

- Pressures: P_{a0}=at airway opening, P_{aw}= in central airways, P_A= in the alveoli, P_{pl}= in the pleural space (between lung parenchyma and chest wall).
- Reference pressure is P_0=ambient (set to 0)

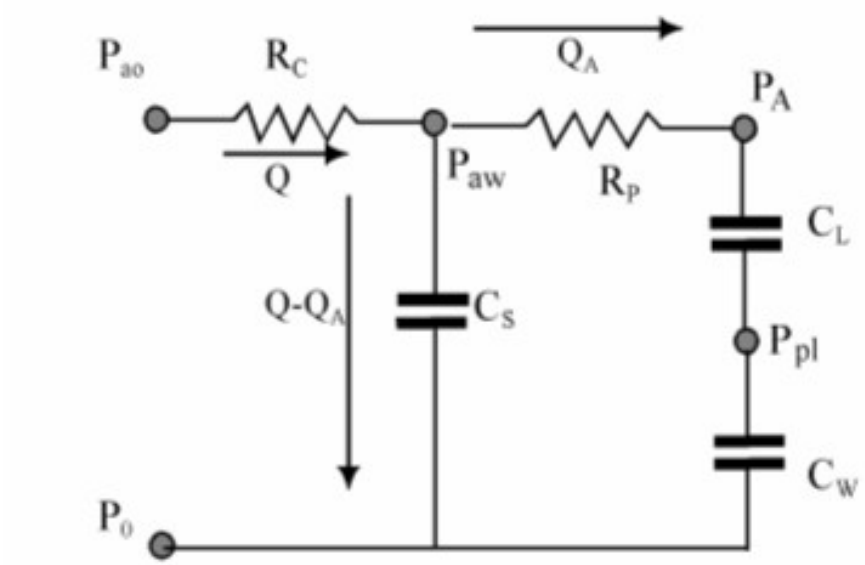

Pressure and Flow Units and Typical Values:

- Pressures' unit is typically [cmH_2O]
- Typical pressure amplitudes in the respiratory system are in the order of magnitude of a fraction of to a few [cmH_2O].
- Flow rates are typically measured in liters per second [L/s].

Resistance and Capacitance Units and Typical Values:

- Resistance's units are therefore [$cmH_2O \cdot s/L$].
- Order of magnitude of normal R_C and R_P are a fraction of to a few [$cmH_2O \cdot s/L$].
- Capacitance's unit is [L/cmH_2O].
- Typical values for C_L and C_w is around 0.2.
- C_S may be normally 1/40 of C_L.

Respiratory mechanics – fluid flow rates are like electrical currents

- Let the volume flow-rate of air entering the respiratory system be Q at a pressure of P_{a0}, either one can be input.
- Need to find the relationship between Q(t) and $P_{a0}(t)$.
- Use Kirchhoff's laws to derive the differential equations.

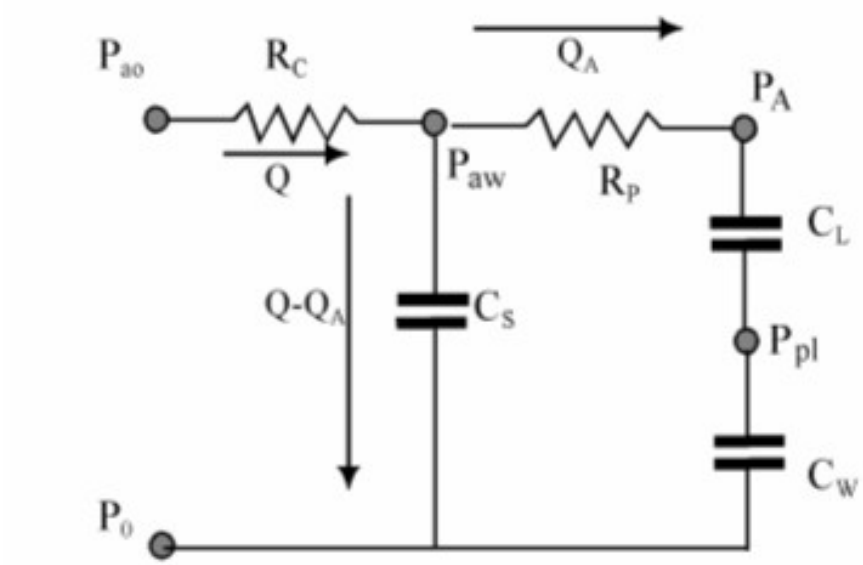

Respiratory mechanics – applying Kirchhoff's laws

- Recall: Q is "I" and P is "V".
- Apply KCL at node P_{aw}:
- $Q-Q_A=C_S(dP_{aw}/dt)$
- Also: $Q_A=C_{eq}(dP_A/dt)$ where $C_{eq}^{-1}=C_L^{-1}+C_W^{-1}$
- Now KVL: $P_{a0}=QR_C + Q_AR_P+P_A$

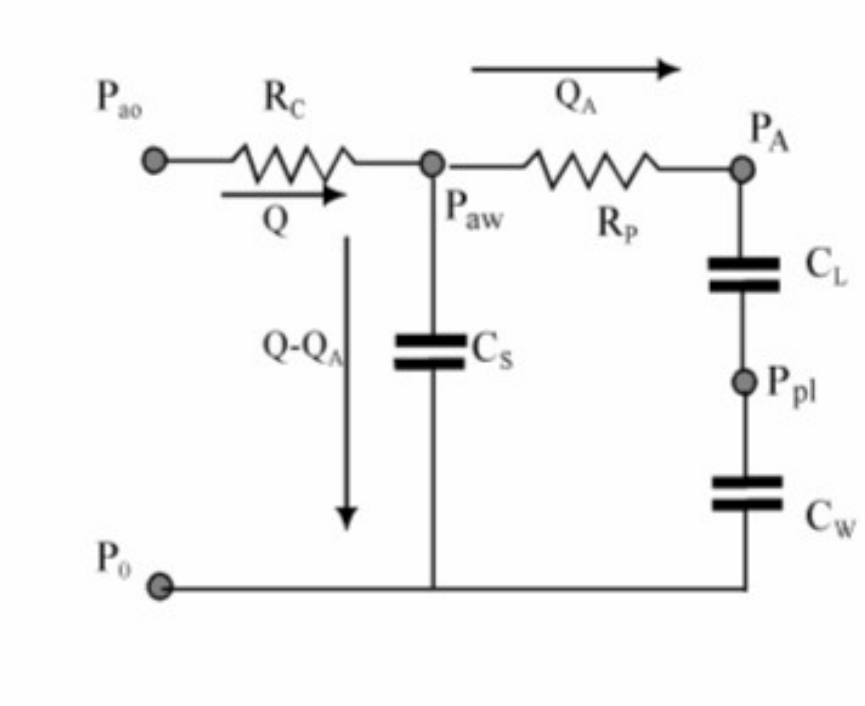

Respiratory mechanics – How do set up a Simulink model?

- $Q-Q_A=C_S(dP_{aw}/dt)$
- $Q_A=C_{eq}(dP_A/dt)$
- How do we proceed systematically?
- Need to set a "state-variable model" (that is, a system of independent first-order differential equations)

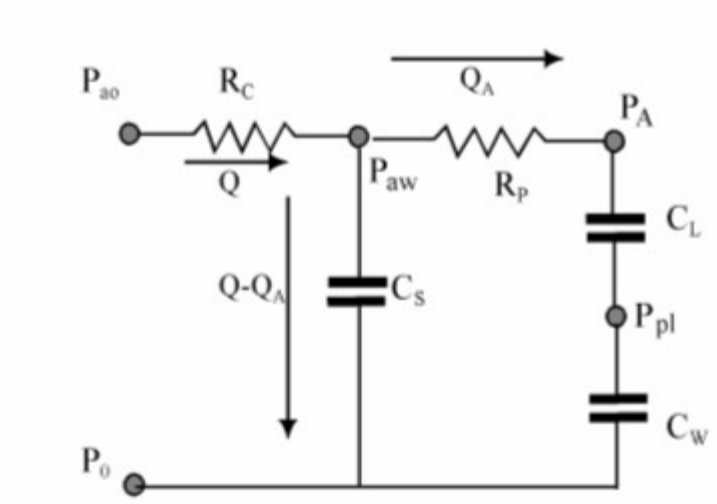

In a RC circuit, capacitor voltages (that can be initialized independently) can be states

Respiratory mechanics – Setting up a state-variable model

- $Q-Q_A=C_S(dP_{aw}/dt)$
- $Q_A=C_{eq}(dP_A/dt)$
- Let P_A and P_{aw} be the state variables.
- Represent Q_A in terms of P_A and P_{aw} :
- $(P_{aw}-P_A)/R_P=Q_A$

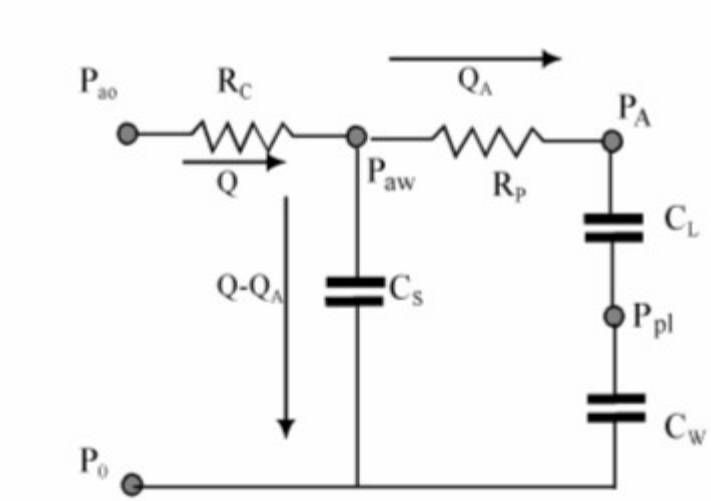

In a RC circuit, capacitor voltages (that can be initialized independently) can be states

Respiratory Mechanics – the resulting state equations

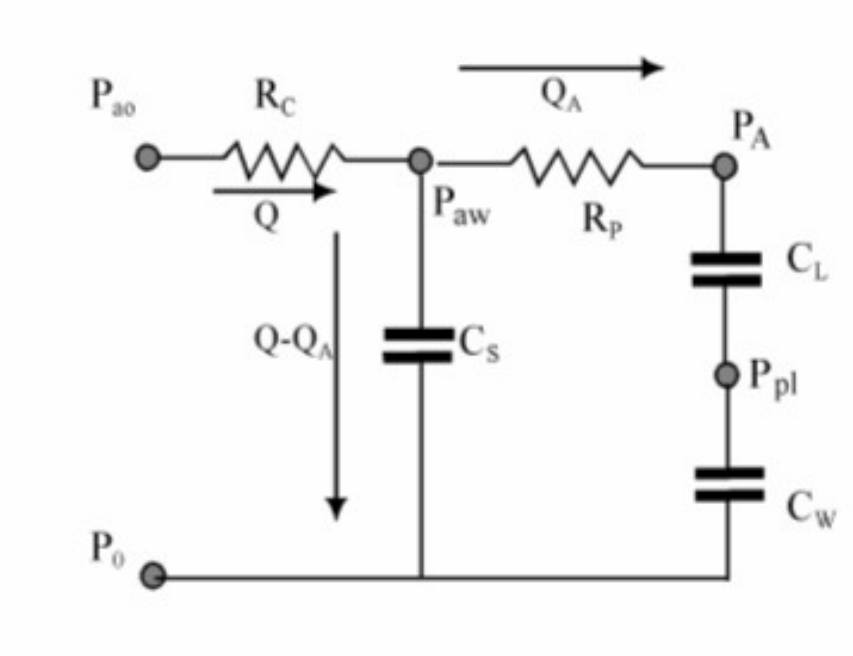

$$\frac{dP_{aw}}{dt} = -\frac{1}{\tau_1}P_{aw} + \frac{1}{\tau_1}P_A + \frac{1}{C_S}Q$$

$$\frac{dP_A}{dt} = \frac{1}{\tau_2}P_{aw} - \frac{1}{\tau_2}P_A$$

$$\tau_1 = R_P C_S \qquad \tau_2 = R_P C_{eq}$$

How do we find the relationship between P_{a0} and Q?

Respiratory Mechanics – the resulting model: state equations and output equation (Scenario 1 – Q is input)

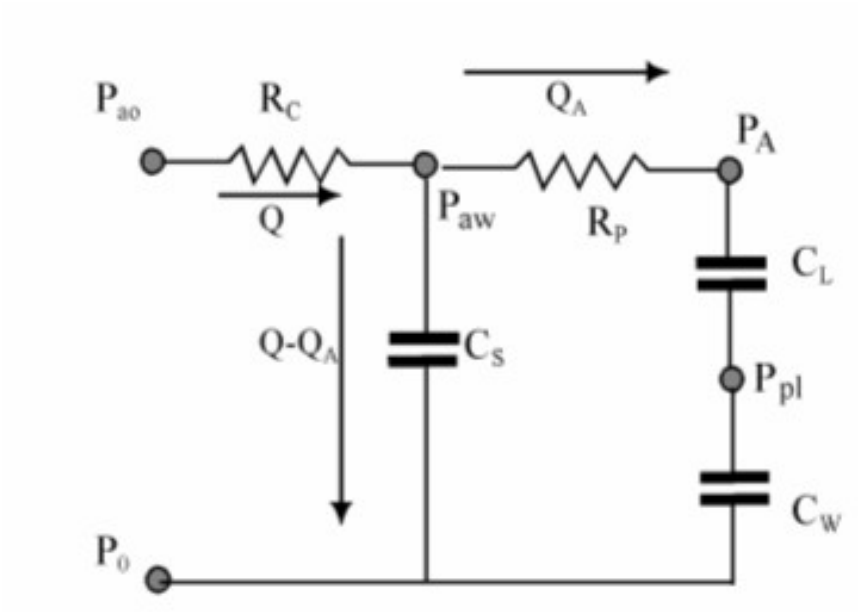

$$\frac{dP_{aw}}{dt} = -\frac{1}{\tau_1}P_{aw} + \frac{1}{\tau_1}P_A + \frac{1}{C_S}Q$$

$$\frac{dP_A}{dt} = \frac{1}{\tau_2}P_{aw} - \frac{1}{\tau_2}P_A$$

$$\tau_1 = R_P C_S \qquad \tau_2 = R_P C_{eq}$$

$$P_{a0} = P_{aw} + R_C Q$$

In general, an output variable is a linear combination of the state variables and the input

Respiratory Mechanics – the resulting model: state equations and output equation (Scenario 2 – P_{a0} is input)

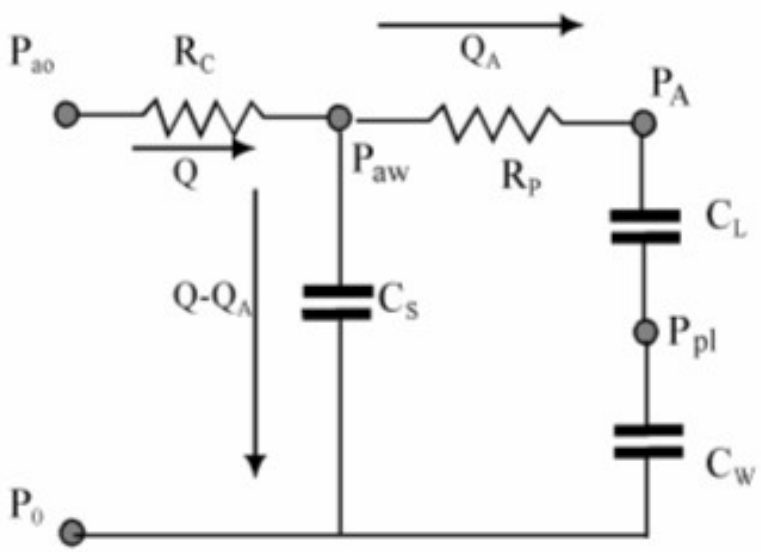

$$\frac{dP_{aw}}{dt} = -\left(\frac{1}{\tau_1} + \frac{1}{\tau_3}\right)P_{aw} + \frac{1}{\tau_1}P_A + \frac{1}{\tau_3}P_{a0}$$

$$\frac{dP_A}{dt} = \frac{1}{\tau_2}P_{aw} - \frac{1}{\tau_2}P_A$$

$$\tau_1 = R_P C_S \qquad \tau_2 = R_P C_{eq} \qquad \tau_3 = R_C C_S$$

$$Q = -\frac{1}{R_C}P_{aw} + \frac{1}{R_C}P_{a0}$$

Scenario: An intensive care unit patient hooked up to a ventilator with a given peak pressure.